CATALOGUE

POWER TRANSMISSION TOWERS

35kV, 110kV, 220kV, 330kV, 500kV

ASPMK 519

DESCRIPTION OF THE PRODUCTS CATALOGUE – «POWER TRANSMISSION TOWERS »

The catalogue of standard lattice towers for power transmission lines of different voltages of 35kV, 110kV, 220kV, 330kV and 500kV has been designed for clients and partners of the company.

Target use and operating classification of the products are featured in the sections of this catalogue. Products of this catalogue are classified based on the voltage, installation type and also line ratio.

Description of products contains the following sections:

1. Schematic View.

2. Technical Description.

3. Scope of Application.

4. Types of Wires.

5. A document that regulates manufacturing process.

Every product is provided with several types of anti-corrosive coatings:

hot-dip galvanization, paint and coatings. Their color is agreed by both the client and the paint manufacturer.

Every product is delivered with its fasteners, which is part of the product design. Should you have any questions concerning a need to introduce any changes and delivery of parts that are not in the catalogue, please get in touch with the company representatives.

1. 35 KV POWER TRANSMISSION TOWERS

1.1. SINGLE CIRCUIT INTERMEDIATE STEEL SUPPORT TOWERS

П35-1; П35-1т 5

1.2. DOUBLE CIRCUIT INTERMEDIATE STEEL SUPPORT TOWERS

П35-2; 1П35-2-3,5 6

1.3. SINGLE CIRCUIT ANCHOR AND ANGLE STEEL SUPPORT TOWERS

У35-1; У35-1+5; У35-1т; У35-1т+5 7
У35-3; У35-3+5; У35-3+9; У35-1ТС 8
У35-1Т-ТС; У35-1Т-ТС+5 9

1.4. DOUBLE CIRCUIT ANCHOR AND ANGLE STEEL SUPPORT TOWERS

У35-2; У35-2+5; У35-2Т; У35-2Т+5 10
У35-4; У35-4+5; У35-4+9; 1У35-2; 1У35-2+5; 1У35-2+10 11
1У35-2т; 1У35-2т+5; 1У35-2т+10; У35-2Т-ТС; У35-2Т-ТС+5 12

1.5 STEEL LONG SPAN SUPPORT TOWERS

УАП35-1; УАП35-2; УАП35-3; УАП35-4; УАП35-5; УАП35-6 13

2.110 KV POWER TRANSMISSION TOWERS

2.1. SINGLE CIRCUIT INTERMEDIATE STEEL SUPPORT TOWERS

П110-1; П110-3; П110-3+4 14
П110-5; П110-5+4; П110-5В; П110-5В+4 15
ПС110-3; ПС110-5В; П110-5В 16
ПС110-9В; ПС110-9В пг 17

2.2. DOUBLE CIRCUIT INTERMEDIATE STEEL SUPPORT TOWERS

П110-2; П110-4; П110-4+4 18
П110-4В; П110-4В+4; П110-4У 19
П110-6; П110-6+4; П110-6В; П110-6В+4 20
П110-6ТС; 1П110-6; 1П110-6-3,2; 1П110-6-8,5 21
ПС110-4; ПС110-6В; ПС110-6В+4 22
ПС110-10В; ПУС110-2 23

2.3. SINGLE CIRCUIT ANCHOR AND ANGLE STEEL SUPPORT TOWERS

У110-1; У110-1+5; У110-1+9; У110-1+14; У110-3; У110-3+5 24
У110-3Н; 1У110-1; 1У110-1+5; 1У110-1+10; 1У110-1+15 25
1У110-3; 1У110-3+5; 1У110-3+10; 1У110-3+15;
1У110-5; 1У110-5+5; 1У110-5+10; 1У110-5+15 26
УС110-3; УС110-3+5; УС110-3+9; УС110-3+14; УС110-5; 27
У110-1ТС+5; У110-1ТС+14 28

2.4. STEEL BRANCH SUPPORT TOWERS

1У110-7; 1У110-7+10; УС110-7; УС110-7+5; УС110-7+9; УС110-7+14 29
УС110-8; УС110-8+5 30

2.5. DOUBLE CIRCUIT ANCHOR AND ANGLE STEEL SUPPORT TOWERS

У110-2; У110-2+5; У110-2+9; У110-2+14; У110-2В; У110-2В+5 31
У110-2П; У110-2П+5; У110-2П+9; У110-2П+14; У110-2Т; У110-2Т+9 32
У110-4; У110-4+5; У110-4Н; У110-4Н+5 33
1У110-2; 1У110-2+5; 1У110-2+10; 1У110-2+15;
1У110-4; 1У110-4+5; 1У110-4+10; 1У110-4+15 34
1У110-4П; 1У110-4П+5;
1У110-4П+10; 1У110-4П+15; 1У110-8 35
УС110-6; У110-2ТС; У110-2ТС+5; У110-2ТС+14 36

3.220 KV POWER TRANSMISSION TOWERS

3.1. SINGLE CIRCUIT INTERMEDIATE STEEL SUPPORT TOWERS

П220-3; П220-3+5; П220-3Т; П220-3Т+5 37
2П220-1; 2П220-1-6,8; 2П220-1-11,5; 2П220-1т; 2П220-1т-6,8; 2П220-1т-11,5 38
ПС220-3; ПС220-5 39
ПС220-5Т 40

3.2. DOUBLE CIRCUIT INTERMEDIATE STEEL SUPPORT TOWERS

П220-2; П220-2+5; П220-2Т; П220-2Т+5 . . . 41
ЗП220-2; ЗП220-2-5,0; ЗП220-2-11,5; ПС220-2 . . . 42
ПС220-2Т; ПС220-6; ПС220-6+1,8 . . . 43
ПС220-6Т; ПС220-6Т+1,8; У220-1; У220-1+5; У220-1+9; У220-1+14 . . . 44
У220-3; У220-3+5; У220-3+9; У220-3+14 . . . 45

3.3. SINGLE CIRCUIT ANCHOR AND ANGLE STEEL SUPPORT TOWERS

У220-7; У220-7+5; 1У220-1; 1У220-1+5; 1У220-1+10; 1У220-1+15 . . . 46
1У220-1Т; 1У220-1Т+5; 1У220-1Т+10; 1У220-1Т+15;
1У220-3; 1У220-3+5; 1У220-3+10; 1У220-3+15 . . . 47
1У220-3Т; 1У220-3Т+5; 1У220-3Т+10; 1У220-3Т+15;
1У220-5; 1У220-5+5; 1У220-5+10; 1У220-5+15 . . . 48

3.4. DOUBLE CIRCUIT ANCHOR AND ANGLE STEEL SUPPORT TOWERS

У220-2; У220-2+5; У220-2+9; У220-2+14;
У220-2Т; У220-2Т+5; У220-2Т+9; У220-2Т+14 . . . 49
1У220-4; 1У220-4+5; 1У220-4+10; 1У220-4+15;
1У220-4т; 1У220-4Т+5; 1У2204т+10; У220-4Т+15 . . . 50

4.330 KV POWER TRANSMISSION TOWERS

4.1. SINGLE CIRCUIT INTERMEDIATE STEEL SUPPORT TOWERS

П330-3 . . . 51

4.2. DOUBLE CIRCUIT INTERMEDIATE STEEL SUPPORT TOWERS

П330-2; П330-2Т. . . . 52
ЗП330-2; ЗП330-2-5,0; ЗП330-2-11,5;
ЗП330-2Т; ЗП330-2т-5,0; ЗП330-2т-11,5 . . . 53
ПС330-2 . . . 54

4.3. SINGLE CIRCUIT ANCHOR AND ANGLE STEEL SUPPORT TOWERS

У330-1; У330-1+5; У330-1+9;
У330-3; У330-3+5; У330-3+9; У330-3+14 . . . 55

4.4. DOUBLE CIRCUIT ANCHOR AND ANGLE STEEL SUPPORT TOWERS

У330-2; У330-2+9; У330-2т; У330-2т+5; У330-2т+9; У330-2т+14 . . . 56

5.500 KV POWER TRANSMISSION TOWERS

5.1. SINGLE CIRCUIT INTERMEDIATE STEEL SUPPORT TOWERS

ПБ4. . . . 57
ПБ4-I; ПБ4-II; ПБ4-III; ПБ4-IV . . . 58
ПБ42 . . . 59
ПП500-3. . . . 60
ПП500-3-I; ПП500-3-II; ПП500-3-III; ПП500-3-IV . . . 61
ПП500-7. . . . 62
ПП500-7-I; ПП500-7-II; ПП500-7-III; ПП500-7-IV . . . 63
ПС500-3; ПС500-3+10 . . . 64
Р2; Р2+5; Р2+10 . . . 65

5.2. SINGLE CIRCUIT ANCHOR AND ANGLE STEEL SUPPORT TOWERS

У2; У2+5; У2+12 . . . 66
У2к; У2к+5; У2к+12 . . . 67
У2т; У2+5т; У2+12т . . . 68
УС500-3; УС500-3+5; УС500-3+13 . . . 69
УСК500-3; УСК500-3+5; УСК500-3+13. . . . 70
УСКТ500-3+5 . . . 71

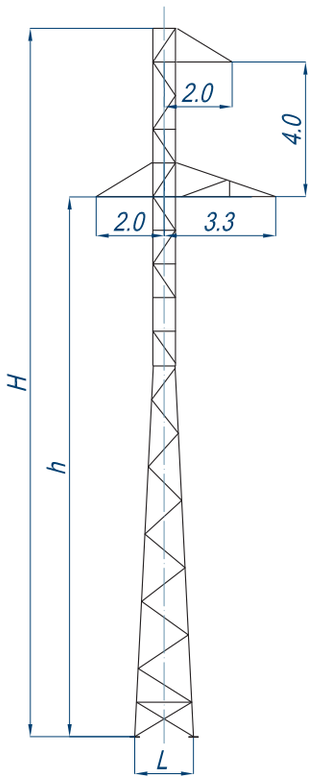

Product Name	П35-1
Glaze Ice Region	I-IV
Wind Region	III
Wire Model	AC-70÷AC-150
Dimensions in Foundation Axis L, m	1,8
Tower Height H, m	19,0
Высота до нижней траверсы h, м	15,0
Weight of Tower with Zinc Coating, kg	1560
Standard Project Number	3078тм
Note	Towers are used also in mountainous regions.

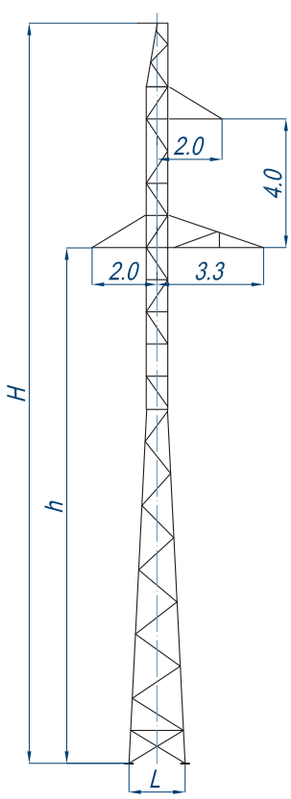

Product Name	П35-1т
Glaze Ice Region	I-IV
Wind Region	III
Wire Model	AC-70÷AC-150
Dimensions in Foundation Axis L, m	1,8
Tower Height H, m	20,9
Высота до нижней траверсы h, м	15,0
Weight of Tower with Zinc Coating, kg	1668
Standard Project Number	3078тм
Note	Towers are used also in mountainous regions.

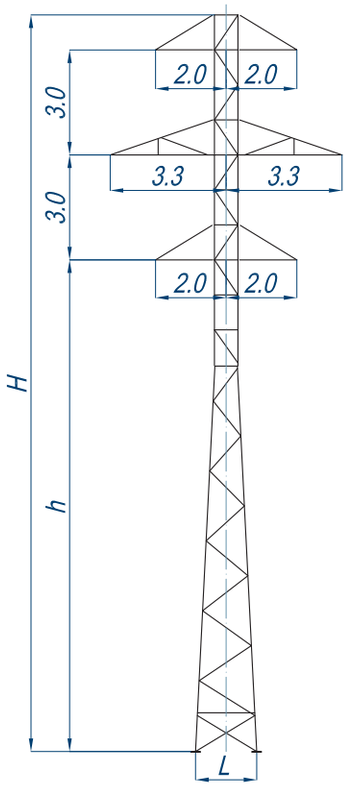

Product Name	П35-2
Glaze Ice Region	I-IV
Wind Region	III
Wire Model	AC-70÷AC-150
Dimensions in Foundation Axis L, m	1,8
Tower Height H, m	21,0
Height up to Lower Crossarm h, m	14,0
Weight of Tower with Zinc Coating, kg	1914
Standard Project Number	3078тм

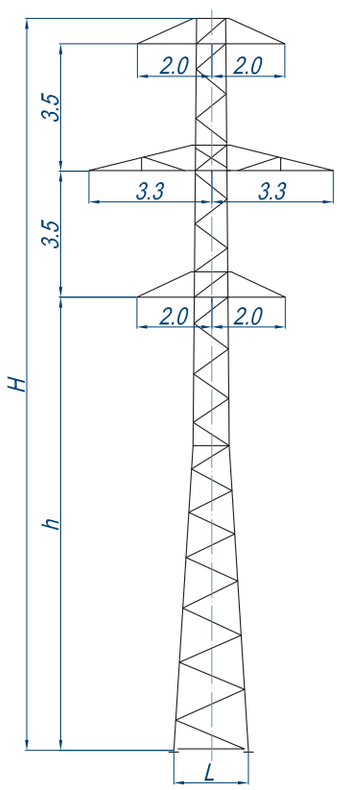

Product Name	1П35-2-3,5
Glaze Ice Region	I-IV
Wind Region	III
Wire Model	AC70 ÷ AC120
Dimensions in Foundation Axis L, m	2,09
Tower Height H, m	20,2
Height up to Lower Crossarm h, m	12,5
Weight of Tower with Zinc Coating, kg	1786
Standard Project Number	3.407.2-170

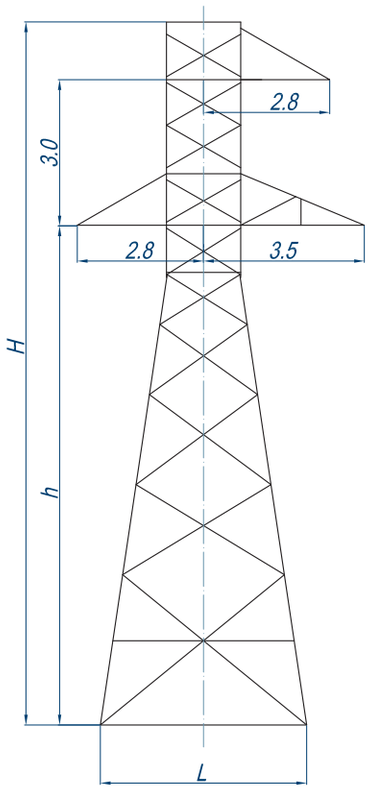

Product Name	У35-1	У35-1+5
Glaze Ice Region	I-IV	I-IV
Wind Region	III	III
Wire Model	AC-70÷ AC-150	AC-70 ÷ AC-150
Dimensions in Foundation Axis L, m	4,2	5,7
Tower Height H, m	14,0	19,0
Height up to Lower Crossarm h, m	10,0	15,0
Weight of Tower with Zinc Coating, kg	3082	4722
Standard Project Number	3078тм	

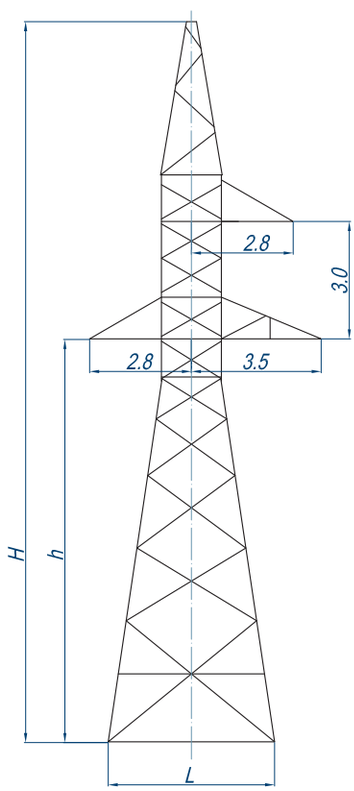

Product Name	У35-1т	У35-1т+5
Glaze Ice Region	I-IV	I-IV
Wind Region	III	III
Wire Model	AC70 ÷ AC150	AC70 ÷ AC150
Dimensions in Foundation Axis L, m	4,2	5,7
Tower Height H, m	17,95	22,95
Height up to Lower Crossarm h, m	10,0	15,0
Weight of Tower with Zinc Coating, kg	3264	4903
Standard Project Number	3078тм	
Note	Possible to use lightning rods P9 (8m), P10 (5m)	

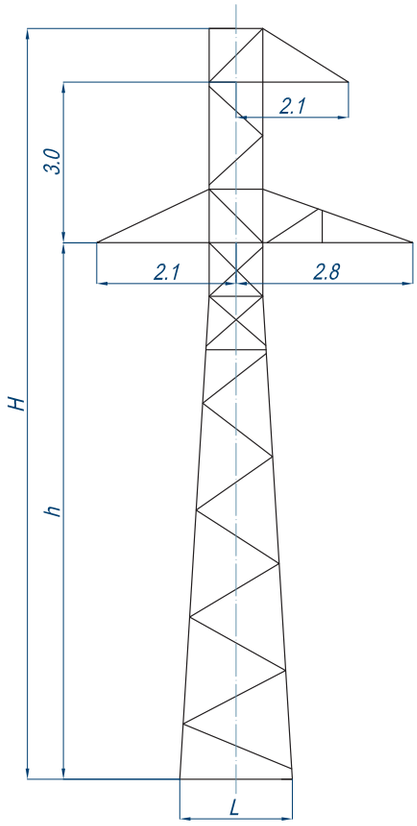

Product Name	У35-3	У35-3+5	У35-3+9
Glaze Ice Region	I-IV	I-IV	I-IV
Wind Region	III	III	III
Wire Model	AC-70 ÷ AC-95	AC-70 ÷ AC-95	AC-70 ÷ AC-95
Dimensions in Foundation Axis L, m	2,19	2,83	3,33
Tower Height H, m	14,0	19,0	23,0
Height up to Lower Crossarm h, m	10,0	15,0	19,0
Weight of Tower with Zinc Coating, kg	1762	2392	2937
Standard Project Number		7227тм	

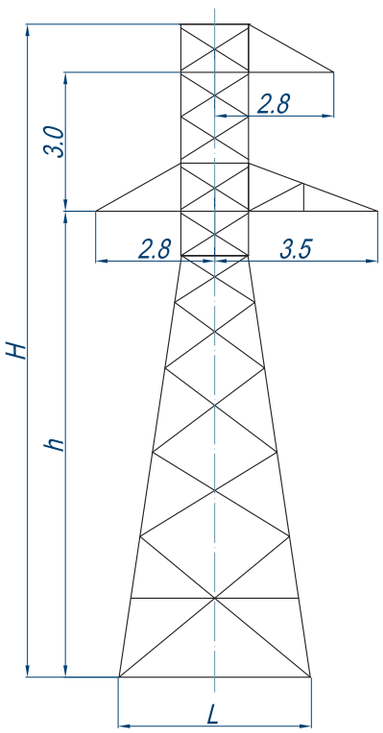

Product Name	У35-1ТС
Glaze Ice Region	I-IV
Wind Region	III
Wire Model	AC-70 ÷ AC-150
Dimensions in Foundation Axis L, m	4,2
Tower Height H, m	14,0
Высота до нижней траверсы h, м	10,0
Weight of Tower with Zinc Coating, kg	3005
Standard Project Number	3.407-119
Note	Standard towers built using thin walled angle bars.

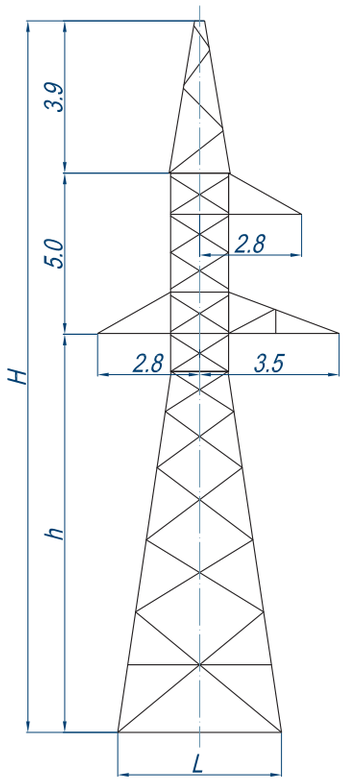

Product Name	У35-1Т-ТС	У35-1Т-ТС+5
Glaze Ice Region	I-IV	I-IV
Wind Region	III	III
Wire Model	AC-70 ÷ AC-150	AC-70 ÷ AC-150
Dimensions in Foundation Axis L, m	4,2	5,7
Tower Height H, m	17,95	22,95
Высота до нижней траверсы h, м	10,0	15,0
Weight of Tower with Zinc Coating, kg	3186	4451
Standard Project Number	3.407-119	
Note	Standard towers built using thin walled angle bars.	

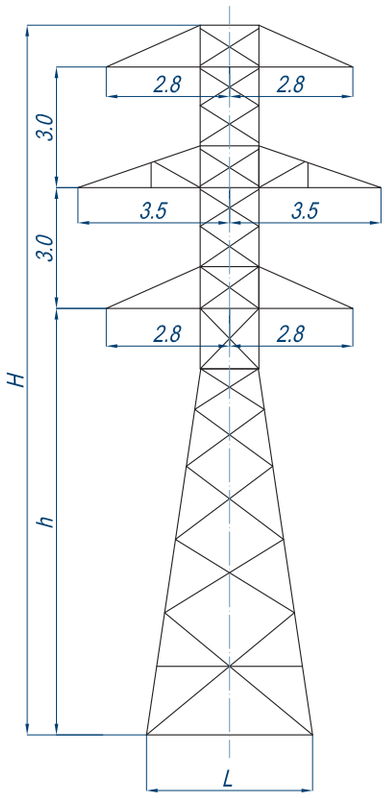

Product Name	У35-2	У35-2+5
Glaze Ice Region	I-IV	I-IV
Wind Region	III	III
Wire Model	AC-70 ÷ AC-150	AC-70 ÷ AC-150
Dimensions in Foundation Axis L, m	4,2	5,7
Tower Height H, m	17,5	22,5
Height up to Lower Crossarm h, m	10,5	15,5
Weight of Tower with Zinc Coating, kg	4989	6807
Standard Project Number	3078тм	
Note	Towers are used also in mountainous regions when PTL turn angle is limited.	

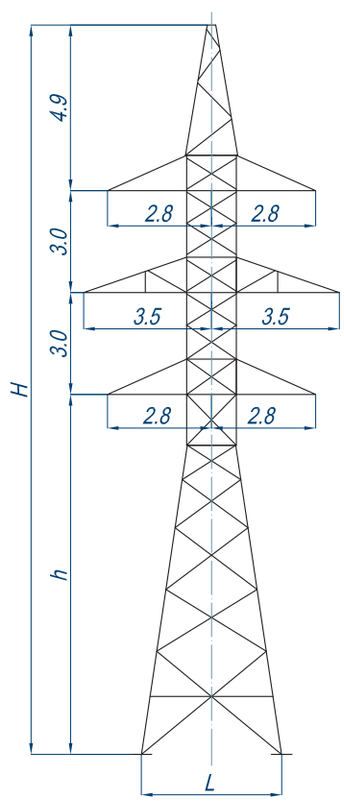

Product Name	У35-2Т	У35-2Т+5
Glaze Ice Region	I-IV	I-IV
Wind Region	III	III
Wire Model	AC-70 ÷ AC-150	AC-70 ÷ AC-150
Dimensions in Foundation Axis L, m	4,2	5,7
Tower Height H, m	21,45	26,45
Height up to Lower Crossarm h, m	10,5	15,5
Weight of Tower with Zinc Coating, kg	5171	6990
Standard Project Number	3078тм	
Note	Towers are used also in mountainous regions when PTL turn angle is limited.	

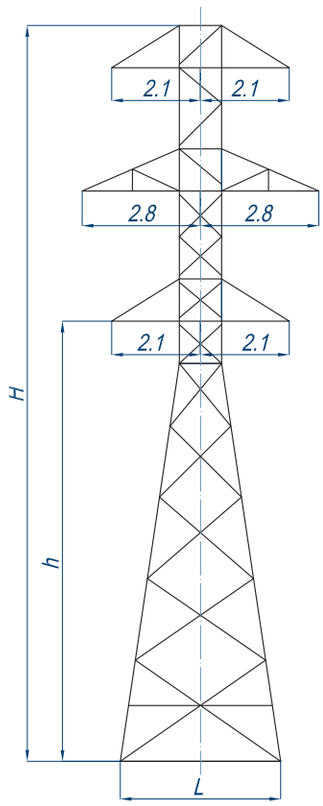

Product Name	У35-4	У35-4+5	У35-4+9
Glaze Ice Region	I-IV	I-IV	I-IV
Wind Region	III	III	III
Wire Model	AC-70 ÷ AC-95	AC-70 ÷ AC-95	AC-70 ÷ AC-95
Dimensions in Foundation Axis L, m	3,9	5,416	6,616
Tower Height H, m	17,5	22,5	26,5
Height up to Lower Crossarm h, m	10,5	15,5	18,5
Weight of Tower with Zinc Coating, kg	2916	3984	5258
Standard Project Number		7227тм	

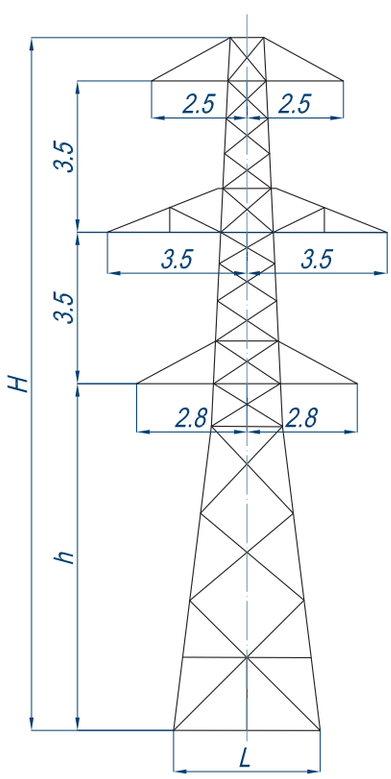

Product Name	1У35-2	1У35-2+5	1У35-2+10
Glaze Ice Region	I-IV	I-IV	I-IV
Wind Region	III	III	III
Wire Model	AC-120	AC-120	AC-120
Dimensions in Foundation Axis L, m	3,4	4,7	5,9
Tower Height H, m	16,0	21,0	26,0
Height up to Lower Crossarm h, m	8,0	13,0	18,0
Weight of Tower with Zinc Coating, kg	3835	5579	7137
Standard Project Number		3.407.2-170.3	
Note	This type of tower can be used as a dead-end support tower.		

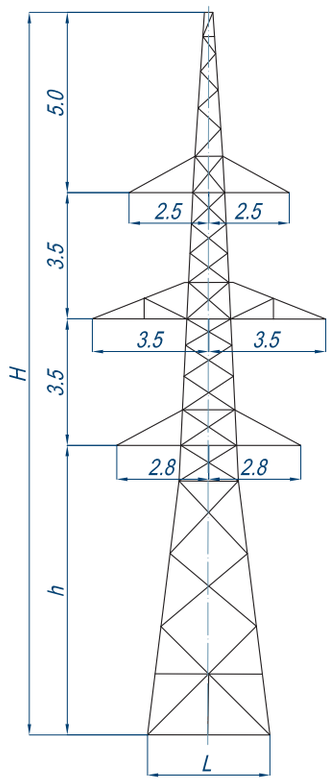

Product Name	1У35-2т	1У35-2т+5	1У35-2т+10
Glaze Ice Region	I-IV	I-IV	I-IV
Wind Region	III	III	III
Wire Model	AC-120	AC-120	AC-120
Dimensions in Foundation Axis L, m	3,48	4,73	5,98
Tower Height H, m	20,0	25,0	30,0
Height up to Lower Crossarm h, m	8,0	13,0	18,0
Weight of Tower with Zinc Coating, kg	4026	5770	7309
Standard Project Number	3.407.2-170.3		
Note	This type of tower can be used as a dead-end support tower.		

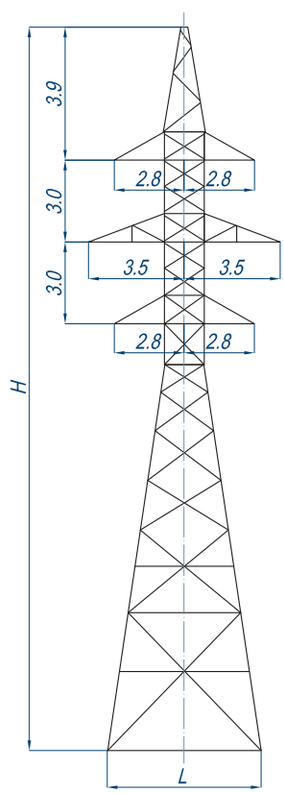

Product Name	У35-2Т-ТС	У35-2Т-ТС+5
Glaze Ice Region	I-IV	I-IV
Wind Region	III	III
Wire Model	AC-70 ÷ AC-150	AC-70 ÷ AC-150
Dimensions in Foundation Axis L, m	4,2	5,7
Tower Height H, m	21,4	26,4
Height up to Lower Crossarm h, m	10,5	15,5
Weight of Tower with Zinc Coating, kg	4782	6446
Standard Project Number	3.407-119	
Note	Standard towers built using thin walled angle bars.	

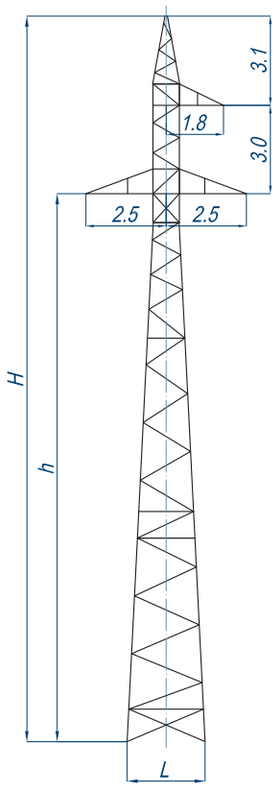

Product Name	УАП35-1	УАП35-2	УАП35-3
Glaze Ice Region	I-IV	I-IV	I-IV
Wind Region	III - IV	III / IV	III / IV
Wire Model	AC-35 ÷ AC-95	AC-35 ÷ AC-95	AC-35 ÷ AC-95
Dimensions in Foundation Axis L, m	2,8	2,4	2,1
Tower Height H, m	25,1	21,1	18,1
Height up to Lower Crossarm h, m	1,9	15,0	12,0
Weight of Tower with Zinc Coating, kg	3283	2801	2353
Standard Project Number	3.407.2-132		
Note	Towers are used with fine wires.		

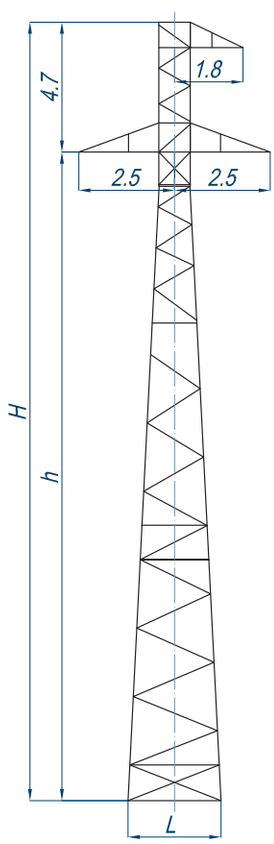

Product Name	УАП35-4	УАП35-5	УАП35-6
Glaze Ice Region	I-IV	I-IV	I-IV
Wind Region	III - IV	III / IV	III / IV
Wire Model	AC-35 ÷ AC-95	AC-35 ÷ AC-95	AC-35 ÷ AC-95
Dimensions in Foundation Axis L, m	2,8	2,4	2,1
Tower Height H, m	22,7	18,7	15,8
Height up to Lower Crossarm h, m	19,0	15,0	12,0
Weight of Tower with Zinc Coating, kg	3165	2684	2236
Standard Project Number	3.407.2-132		
Note	Towers are used with fine wires. They are designed to be used on 6-10kV and 35 kV lines without ground wire.		

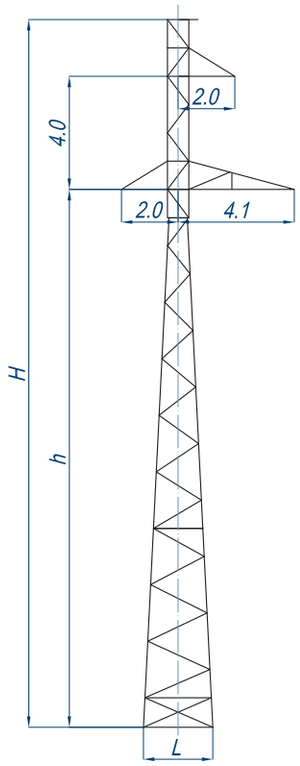

Product Name	П110-1
Glaze Ice Region	I-II
Wind Region	III
Wire Model	AC-70÷ AC-95
Dimensions in Foundation Axis L, m	2,5
Tower Height H, m	25,0
Высота до нижней траверсы h, м	19,0
Weight of Tower with Zinc Coating, kg	1970
Standard Project Number	3078тм
Note	This type of tower is used as an elevated tower on 35 kV overhead lines.

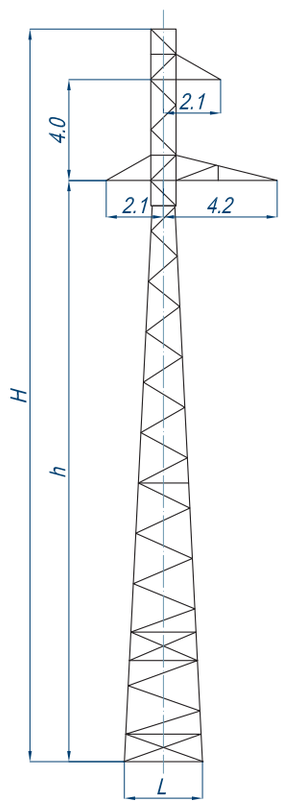

Product Name	П110-3	П110-3+4
Glaze Ice Region	I-II	I-II
Wind Region	III	III
Wire Model	AC-120 ÷ AC-240	AC-120 ÷ AC-240
Dimensions in Foundation Axis L, m	2,8	3,2
Tower Height H, m	25,0	29,0
Высота до нижней траверсы h, м	19,0	23,0
Weight of Tower with Zinc Coating, kg	2546	3228
Standard Project Number	3078тм	
Note	This type of tower is used as an elevated tower on 35 kV overhead lines. The upper section of the tower is welded and coated with zinc.	

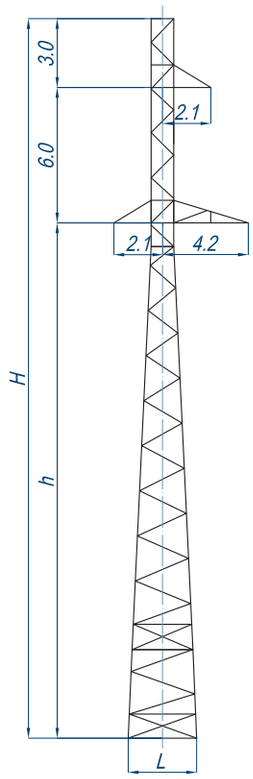

Product Name	П110-5	П110-5+4
Glaze Ice Region	III-IV	I-II
Wind Region	III	III
Wire Model	AC-70 ÷ AC-240	AC-70 ÷ AC-240
Dimensions in Foundation Axis L, m	2,8	3,2
Tower Height H, m	28,0	32,0
Height up to Lower Crossarm h, m	19,0	23,0
Weight of Tower with Zinc Coating, kg	2684	3371
Standard Project Number	3078тм	
Note	The upper section of the tower is welded and coated with cold zinc.	

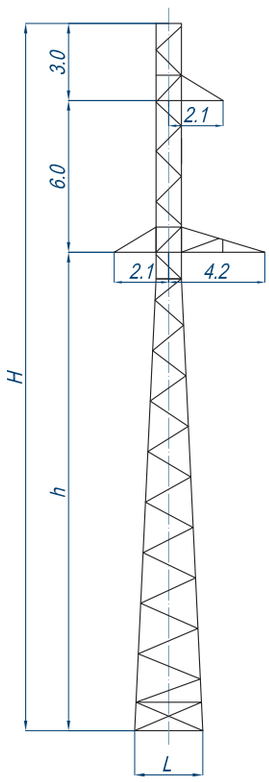

Product Name	П110-5В	П110-5В+4
Glaze Ice Region	III-IV	III-IV
Wind Region	III	III
Wire Model	AC-70 ÷ AC-240	AC-70 ÷ AC-240
Dimensions in Foundation Axis L, m	2,8	3,2
Tower Height H, m	28,0	32,0
Высота до нижней траверсы h, м	19,0	23,0
Weight of Tower with Zinc Coating, kg	2659	3312
Standard Project Number	ДО22-0105-00 1,2 (11520тм)	
Note	Movable towers, they are similar to the П110-5, П110-5+4 type towers.	

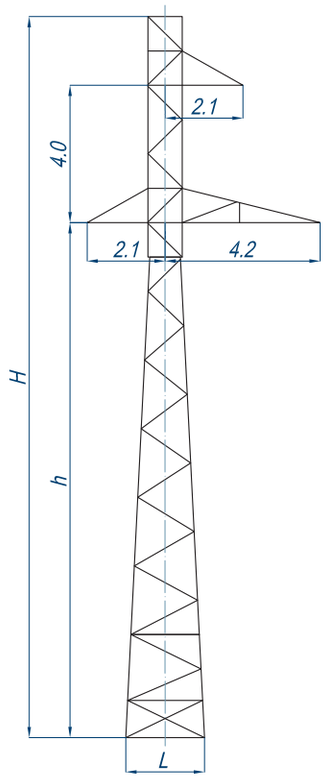

Product Name	ПС110–3
Glaze Ice Region	I-II
Wind Region	III
Wire Model	AC-150 ÷ AC-240
Dimensions in Foundation Axis L, m	2,4
Tower Height H, m	21,0
Height up to Lower Crossarm h, m	15,0
Weight of Tower with Zinc Coating, kg	2123
Standard Project Number	3078тм

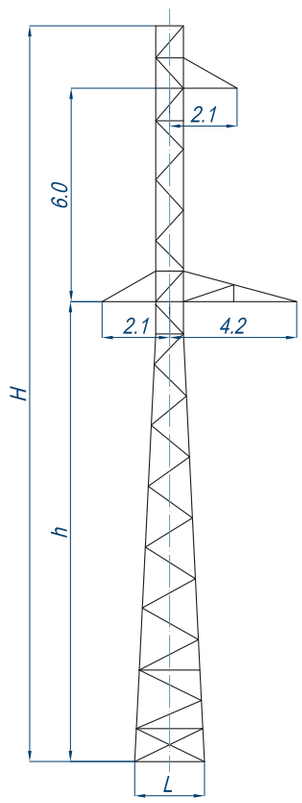

Product Name	ПС110–5В
Glaze Ice Region	III-IV
Wind Region	III
Wire Model	AC-95 ÷ AC-240
Dimensions in Foundation Axis L, m	2,4
Tower Height H, m	24,0
Height up to Lower Crossarm h, m	15,0
Weight of Tower with Zinc Coating, kg	2274
Standard Project Number	ДО 22-0106-00 (11520тм)

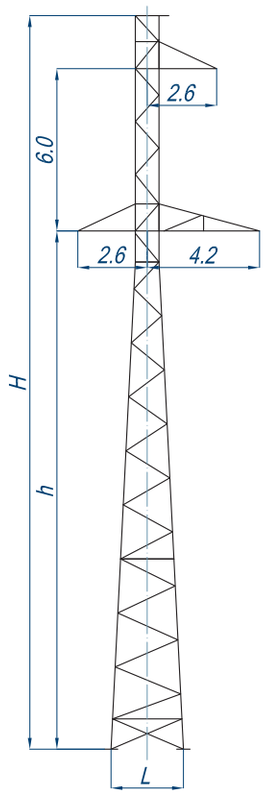

Product Name	ПС110–9В
Glaze Ice Region	III-IV
Wind Region	V
Wire Model	AC-95 ÷ AC-240
Dimensions in Foundation Axis L, m	2,8
Tower Height H, m	27,0
Height up to Lower Crossarm h, m	19,0
Weight of Tower with Zinc Coating, kg	3018
Standard Project Number	ДО 22-0109-00 (11520тм)
Note	У110-1, У110-3 or УС110-5 should be used as anchor and angle towers.

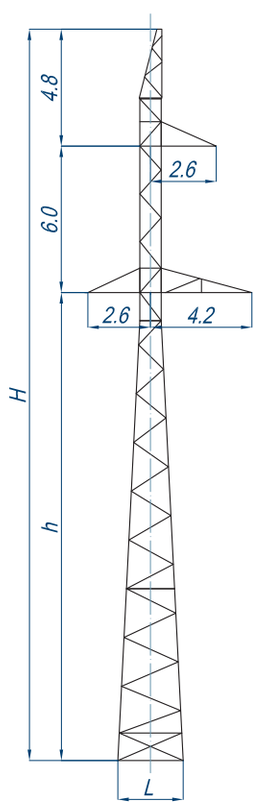

Product Name	ПС110–9ВПГ
Glaze Ice Region	III-IV
Wind Region	V
Wire Model	AC-95 ÷ AC-240
Dimensions in Foundation Axis L, m	2,8
Tower Height H, m	29,8
Height up to Lower Crossarm h, m	19,0
Weight of Tower with Zinc Coating, kg	3172
Standard Project Number	ДО 22-0109-00 (11520тм)
Note	This type of tower is used for overhead lines with melting glaze ice.

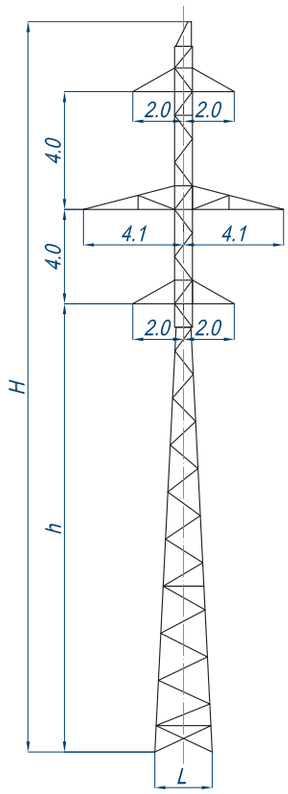

Product Name	П110–2
Glaze Ice Region	I-II
Wind Region	III
Wire Model	AC-70 ÷ AC-95
Dimensions in Foundation Axis L, m	2,5
Tower Height H, m	31,0
Height up to Lower Crossarm h, m	19,0
Weight of Tower with Zinc Coating, kg	2726
Standard Project Number	3078тм
Note	This type of towers is used as an elevated tower on 35 kV overhead lines. The upper section of the tower is welded and coated with cold zinc.

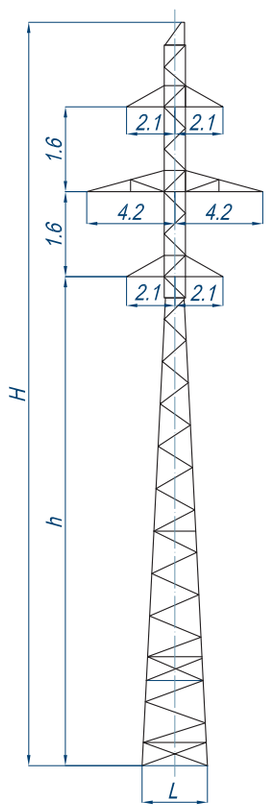

Product Name	П110–4	П110–4+4
Glaze Ice Region	I-II	I-II
Wind Region	III	III
Wire Model	AC-170 ÷ AC-240	AC-170 ÷ AC-240
Dimensions in Foundation Axis L, m	2,8	3,2
Tower Height H, m	31,0	35,0
Высота до нижней траверсы h, м	19,0	23,0
Weight of Tower with Zinc Coating, kg	3299	4052
Standard Project Number	3078тм	
Note	This type of tower is used as an elevated tower on 35 kV overhead lines. The upper section of the tower is welded and coated withcold zinc.	

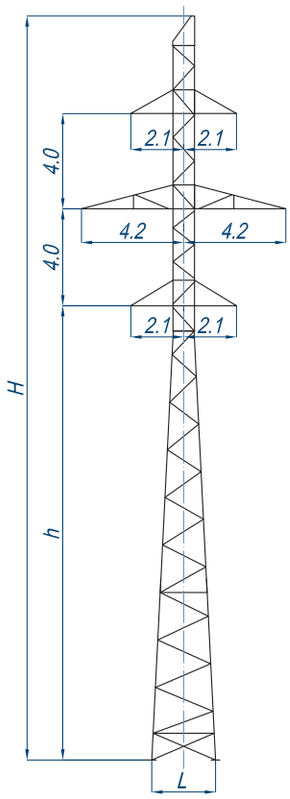

Product Name	П110-4В	П110-4В+4
Glaze Ice Region	I-II	I-II
Wind Region	III	III
Wire Model	AC-170 ÷ AC-240	AC-170 ÷ AC-240
Dimensions in Foundation Axis L, m	2,8	3,2
Tower Height H, m	31,0	35,0
Height up to Lower Crossarm h, m	19,0	23,0
Weight of Tower with Zinc Coating, kg	3363	4102
Standard Project Number	ДО 22-0104-00 (11520тм)	
Note	This type of tower is used as an elevated tower on 35 kV overhead lines. Movable towers are similar to П110-4, П110-4+4 towers.	

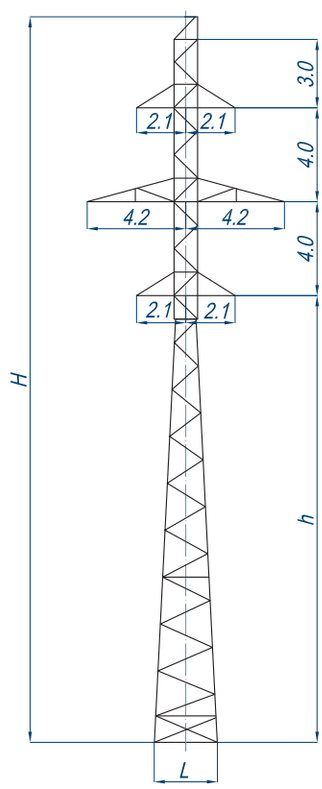

Product Name	П110-4У
Glaze Ice Region	I-IV
Wind Region	III
Wire Model	AC-70 ÷ AC-95
Dimensions in Foundation Axis L, m	2,8
Tower Height H, m	31,0
Height up to Lower Crossarm h, m	19,0
Weight of Tower with Zinc Coating, kg	3355
Standard Project Number	3078тм
Note	This type of tower is used as an anchor and angle tower.

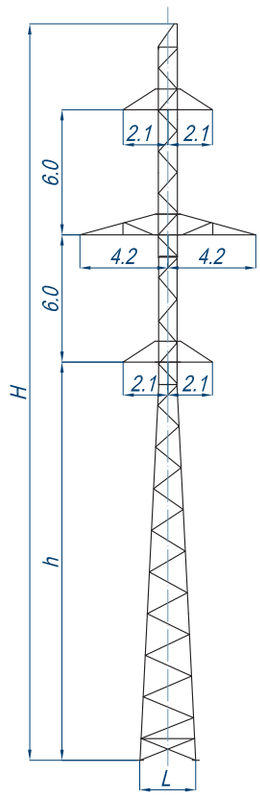

Product Name	П110 – 6	П110 – 6+4
Glaze Ice Region	III-IV	III-IV
Wind Region	III	III
Wire Model	AC-70÷AC-240	AC-70÷AC-240
Dimensions in Foundation Axis L, m	2,8	3,2
Tower Height H, m	35,0	39,0
Height up to Lower Crossarm h, m	19,0	23,0
Weight of Tower with Zinc Coating, kg	3857	4686
Standard Project Number	3078тм, 11520тм	
Note	The upper section of the tower is welded and coated with cold zinc.	

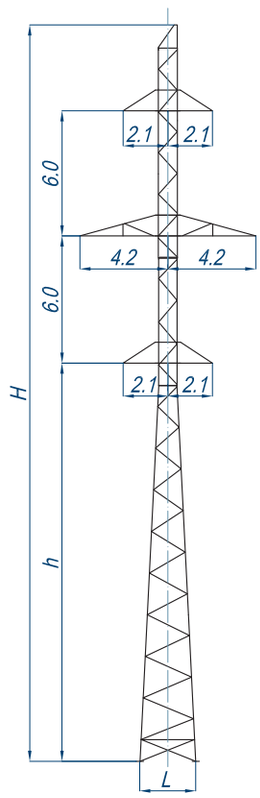

Product Name	П110 – 6В	П110 – 6В+4
Glaze Ice Region	III-IV	III-IV
Wind Region	III	III
Wire Model	AC-70÷AC-240	AC-70÷AC-240
Dimensions in Foundation Axis L, m	2,8	3,2
Tower Height H, m	35,0	39,0
Height up to Lower Crossarm h, m	19,0	23,0
Weight of Tower with Zinc Coating, kg	4035	4787
Standard Project Number	3078тм, 11520тм	
Note	Movable towers are similar to П110-6, П110-6+4.	

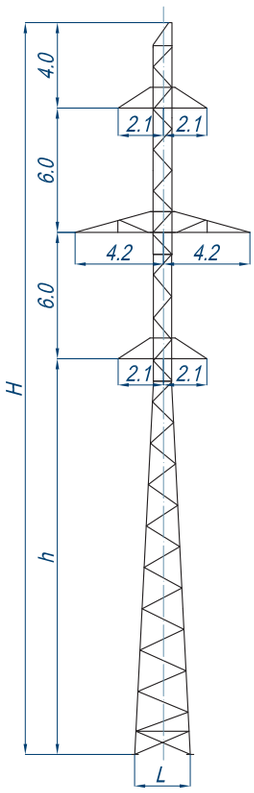

Product Name	П110-6ТС
Glaze Ice Region	III-IV
Wind Region	III
Wire Model	AC-70 ÷ AC-240
Dimensions in Foundation Axis L, m	2,8
Tower Height H, m	35,0
Height up to Lower Crossarm h, m	19,0
Weight of Tower with Zinc Coating, kg	3371
Standard Project Number	3.407-119
Note	Standard towers built using thin walled angle bars. The upper section of the tower is welded and coated with cold zinc.

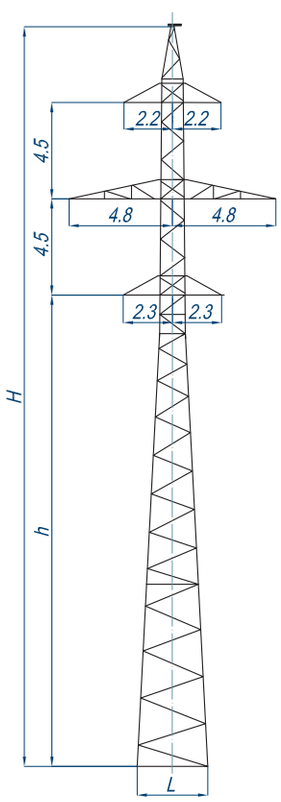

Product Name	1П110-6	1П110-6-3,2	1П110-6-8,5
Glaze Ice Region	I-IV	I-IV	I-IV
Wind Region	III	III	III
Wire Model	AC-70 ÷ AC-240	AC-70 ÷ AC-240	AC-70 ÷ AC-240
Dimensions in Foundation Axis L, m	3,35	3,02	2,47
Tower Height H, m	34,5	31,3	26
Height up to Lower Crossarm h, m	22,0	18,8	13,5
Weight of Tower with Zinc Coating, kg	4131	3629	2950
Standard Project Number	3.407.2-170		

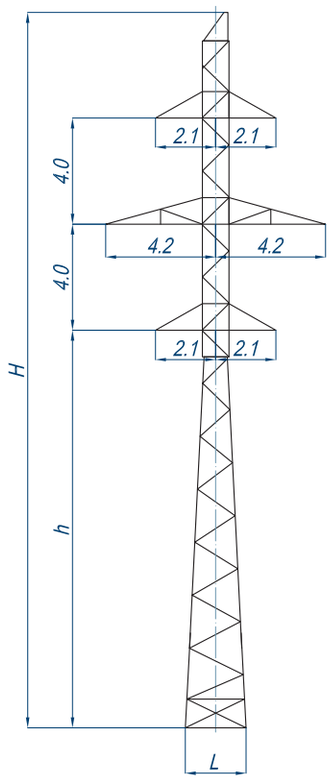

Product Name	ПС110-4
Glaze Ice Region	I-II
Wind Region	III
Wire Model	AC-70 ÷ AC-95
Dimensions in Foundation Axis L, m	2,4
Tower Height H, m	27,0
Height up to Lower Crossarm h, m	15,0
Weight of Tower with Zinc Coating, kg	2916
Standard Project Number	3078тм
Note	The upper section of the tower is welded and coated with cold zinc.

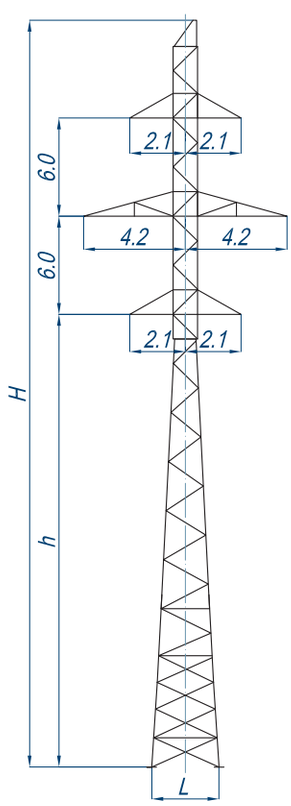

Product Name	ПС110-6В	ПС110-6В+4
Glaze Ice Region	III-IV	III-IV
Wind Region	III	III
Wire Model	AC-70 ÷ AC-240	AC-70 ÷ AC-240
Dimensions in Foundation Axis L, m	2,4	2,8
Tower Height H, m	31,0	35,0
Height up to Lower Crossarm h, m	15,0	19,0
Weight of Tower with Zinc Coating, kg	3558	4325
Standard Project Number	ДО 22-0106-00 (11520тм)	

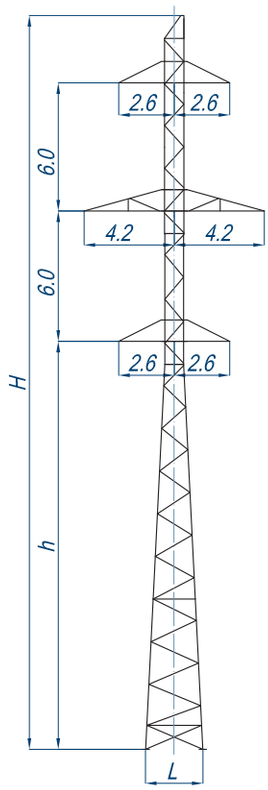

Product Name	ПС110–10В
Glaze Ice Region	III-IV
Wind Region	V
Wire Model	AC-95 ÷ AC-240
Dimensions in Foundation Axis L, m	2,75
Tower Height H, m	34,0
Height up to Lower Crossarm h, m	19,0
Weight of Tower with Zinc Coating, kg	5039
Standard Project Number	ДО 22-0110-00 (11520тм)
Note	У110-2, У110-4 or УС110-6 is used as an anchor tower. Towers are used in mountainous regions.

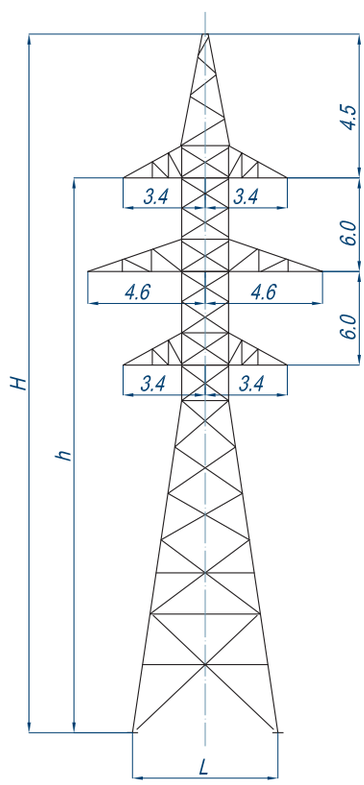

Product Name	ПУС110–2
Glaze Ice Region	III-IV
Wind Region	V
Wire Model	AC-95 ÷ AC-240
Dimensions in Foundation Axis L, m	3,3
Tower Height H, m	35,5
Height up to Lower Crossarm h, m	19,0
Weight of Tower with Zinc Coating, kg	6960
Standard Project Number	3079тм
Note	This type of tower is used as an intermediate angle tower in mountainous regions. У100-2 or УС110-6 should be used as an anchor and angle tower.

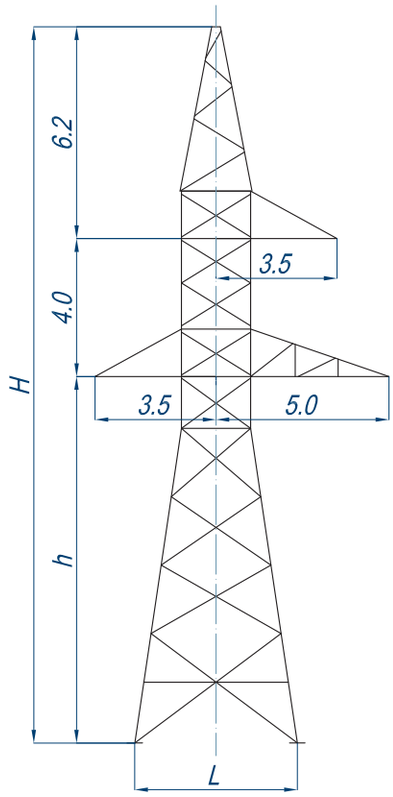

Product Name	У110–1	У110–1+5	У110–1+9	У110–1+14
Glaze Ice Region	I-IV	I-IV	I-IV	I-IV
Wind Region	III	III	III	III
Wire Model	AC-70 ÷ AC-240	AC-70 ÷ AC-240	AC-70 ÷ AC-240	AC-70 ÷ AC-240
Dimensions in Foundation Axis L, m	4,8	6,3	7,5	9,0
Tower Height H, m	20,7	25,7	29,7	34,7
Height up to Lower Crossarm h, m	10,5	15,5	19,5	24,5
Weight of Tower with Zinc Coating, kg	5232	6984	8548	11734
Standard Project Number	3078тм			
Note	P-8 ground wire support can be used. Towers are used in mountainous regions when PTL turn angle is limited. This type of tower is used on 150 kV overhead lines.			

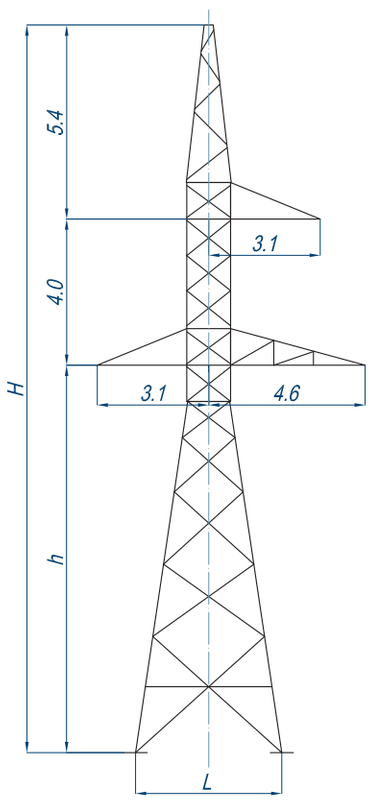

Product Name	У110–3	У110–3+5
Glaze Ice Region	I-IV	I-IV
Wind Region	III	III
Wire Model	AC95 ÷ AC-150	AC95 ÷ AC-150
Dimensions in Foundation Axis L, m	4,1	5,6
Tower Height H, m	19,9	24,9
Height up to Lower Crossarm h, m	10,5	15,5
Weight of Tower with Zinc Coating, kg	3378	4614
Standard Project Number	3078тм	
Note	This type of tower is used also on 150 kV overhead lines. Towers are normal for overhead lines up to AC 120/19 wires inclusive and their light version (designed for one broken wire) for overhead lines with AC 150 wires.	

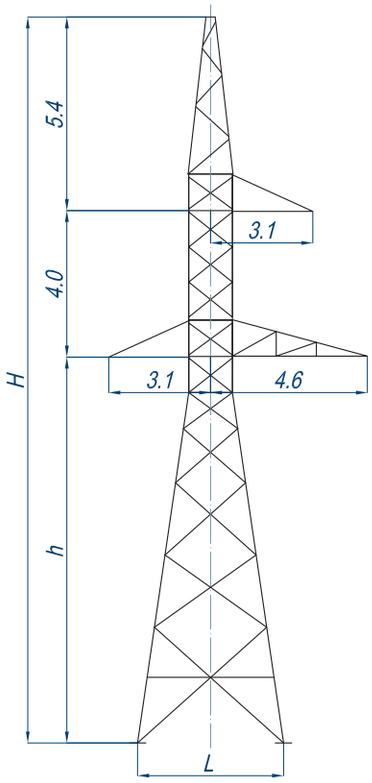

Product Name	У110-3Н
Glaze Ice Region	I-IV
Wind Region	III
Wire Model	AC-70 ÷ AC-150
Dimensions in Foundation Axis L, m	4,1
Tower Height H, m	19,0
Height up to Lower Crossarm h, m	10,5
Weight of Tower with Zinc Coating, kg	3085
Standard Project Number	5778тм
Note	The upper section of the tower is welded and coated with cold zinc. Towers are similar to У110-3 towers.

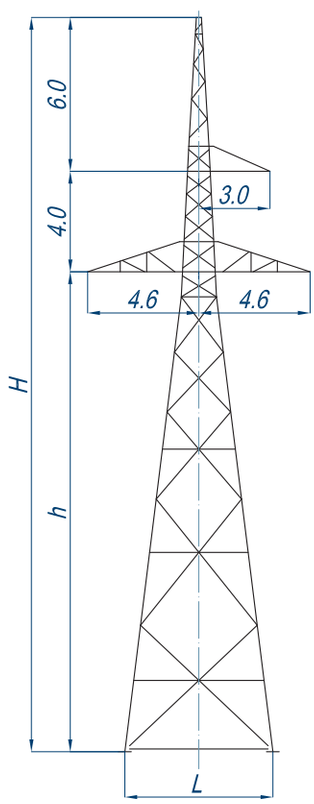

Product Name	1У110-1	1У110-1+5	1У110-1+10	1У110-1+15
Glaze Ice Region	I-IV	I-IV	I-IV	I-IV
Wind Region	III	III	III	III
Wire Model	AC-120	AC-120	AC-120	AC-120
Dimensions in Foundation Axis L, m	3,48	4,73	5,98	7,23
Tower Height H, m	19,0	24,0	29,0	34,0
Height up to Lower Crossarm h, m	9,0	14,0	19,0	24,0
Weight of Tower with Zinc Coating, kg	3217	4810	6201	7754
Standard Project Number	3.407.2-170			
Note	Spacers can be used with this type of tower (spacers weight is not specified).			

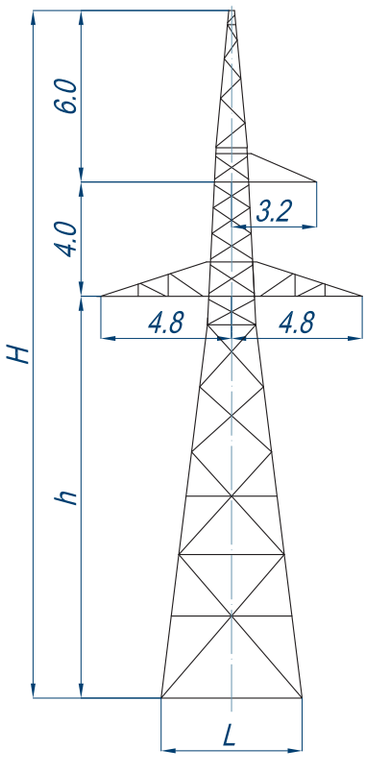

Product Name	1У110-3	1У110-3+5	1У110-3+10	1У110-3+15
Glaze Ice Region	I-IV	I-IV	I-IV	I-IV
Wind Region	III	III	III	III
Wire Model	AC-240	AC-240	AC-240	AC-240
Dimensions in Foundation Axis L, m	3,78	5,03	6,28	7,53
Tower Height H, m	19,0	24,0	29,0	34,0
Height up to Lower Crossarm h, m	9,0	14,0	19,0	24,0
Weight of Tower with Zinc Coating, kg	4111	5849	7406	9490
Standard Project Number	3.407.2-170			
Note	Spacers can be used with type of tower (spacers weight is not specified).			

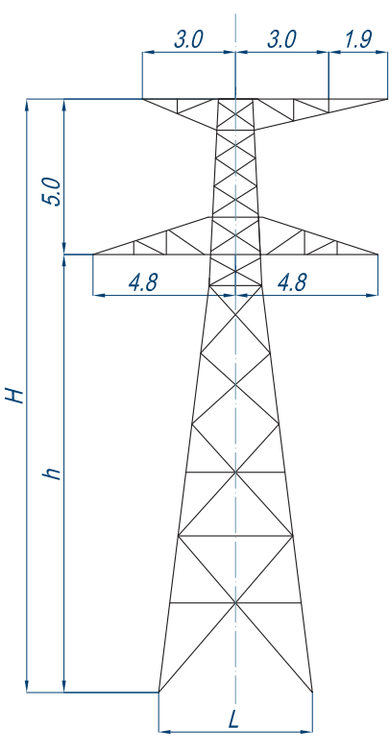

Product Name	1У110-5	1У110-5+5	1У110-5+10	1У110-5+15
Glaze Ice Region	I-IV	I-IV	I-IV	I-IV
Wind Region	III	III	III	III
Wire Model	AC-240	AC-240	AC- 240	AC -240
Dimensions in Foundation Axis L, m	3,78	5,03	6,28	7,53
Tower Height H, m	14,0	19,0	24,0	29,0
Height up to Lower Crossarm h, m	9,0	14	19,0	24,0
Weight of Tower with Zinc Coating, kg	4046	5818	7372	9583
Standard Project Number	3.407.2-156			
Note	Spacers can be used with type of tower. Towers designed for areas with polluted air. Towers with horizontal configuration of wires.			

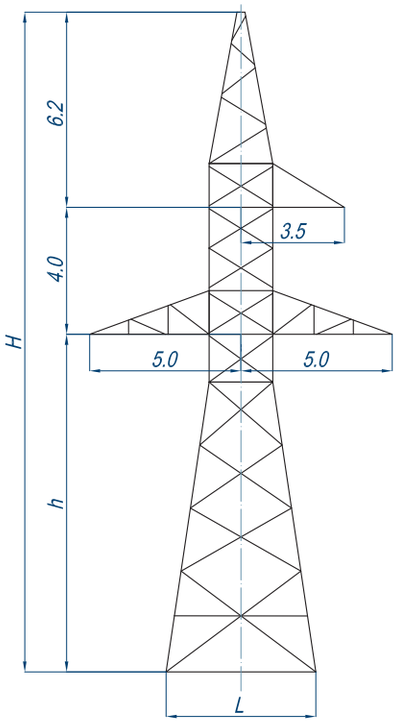

Product Name	УС110-3	УС110-3+5	УС110-3+9	УС110-3+14
Glaze Ice Region	I-IV	I-IV	I-IV	I-IV
Wind Region	III	III	III	III
Wire Model	AC-70÷ AC-240	AC-70÷ AC-240	AC-70÷ AC-240	AC-70÷ AC-240
Dimensions in Foundation Axis L, m	4,8	6,3	7,5	9,0
Tower Height H, m	20,7	25,7	29,7	34,7
Height up to Lower Crossarm h, m	10,5	15,5	19,5	24,5
Weight of Tower with Zinc Coating, kg	5503	7285	8823	12012
Standard Project Number	3079-тм			
Note	Towers with horizontal configuration of wires. Possible to use ground wire support to install a lightning rod.			

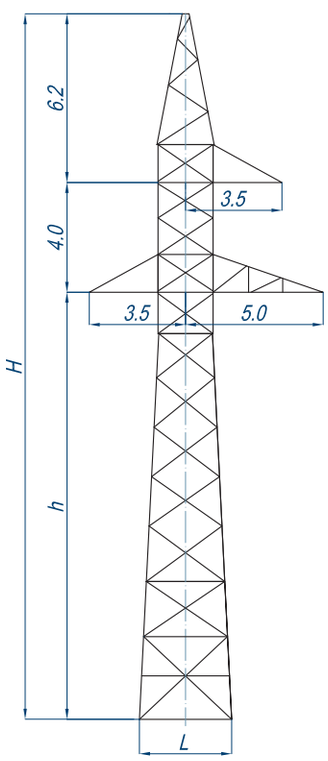

Product Name	УС110-5
Glaze Ice Region	I-IV
Wind Region	III
Wire Model	AC-70 ÷ AC-240
Dimensions in Foundation Axis L, m	3,5
Tower Height H, m	25,7
Height up to Lower Crossarm h, m	15,5
Weight of Tower with Zinc Coating, kg	7007
Standard Project Number	3079тм
Note	Tower designed to be used in cities. This type of tower can be used on 35kV overhead lines.

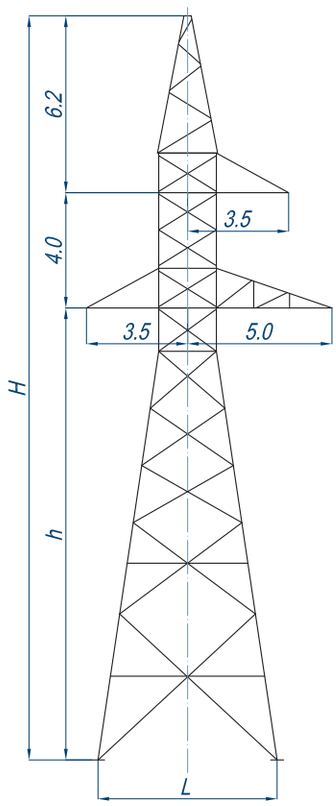

Product Name	У110-1ТС+5	У110-1ТС+14
Glaze Ice Region	I-IV	I-IV
Wind Region	III	III
Wire Model	AC-70÷ AC-240	AC-70÷ AC-240
Dimensions in Foundation Axis L, m	6,3	9,0
Tower Height H, m	25,7	34,7
Height up to Lower Crossarm h, m	15,5	24,5
Weight of Tower with Zinc Coating, kg	6415	11118
Standard Project Number	3.407-119	
Note	Standard towers built using thin walled angle bars.	

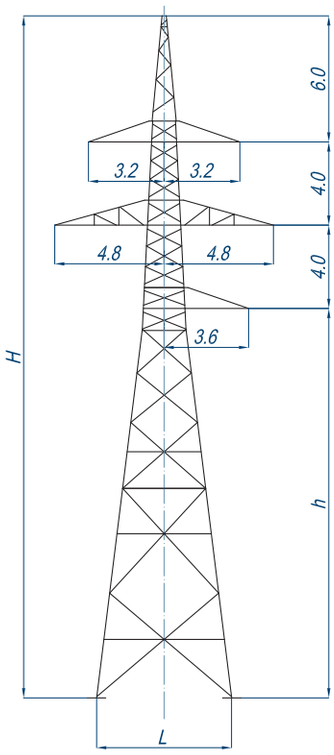

Product Name	1У110–7	1У110–7+10
Glaze Ice Region	I-IV	I-IV
Wind Region	III	III
Wire Model	AC-240	AC-240
Dimensions in Foundation Axis L, m	4,08	6,58
Tower Height H, m	22,6	32,6
Height up to Lower Crossarm h, m	8,6	18,6
Weight of Tower with Zinc Coating, kg	5905	9595
Standard Project Number	3.407.2-166	

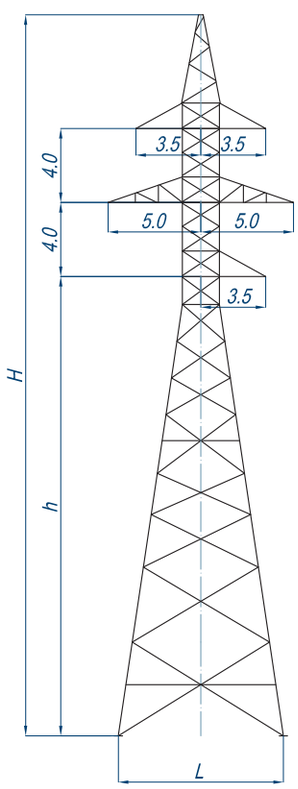

Product Name	УС110–7	УС110–7+5	УС110–7+9	УС110–7+14
Glaze Ice Region	I-IV	I-IV	I-IV	I-IV
Wind Region	III	III	III	III
Wire Model	AC-70 ÷ AC-240	AC-70 ÷ AC-240	AC-70 ÷ AC-240	AC-70 ÷ AC-240
Dimensions in Foundation Axis L, m	4,8	6,3	7,5	9,0
Tower Height H, m	24,7	29,7	33,7	38,7
Height up to Lower Crossarm h, m	10,5	15,5	19,5	24,5
Weight of Tower with Zinc Coating, kg	7804	9864	11610	14977
Standard Project Number	3079тм			

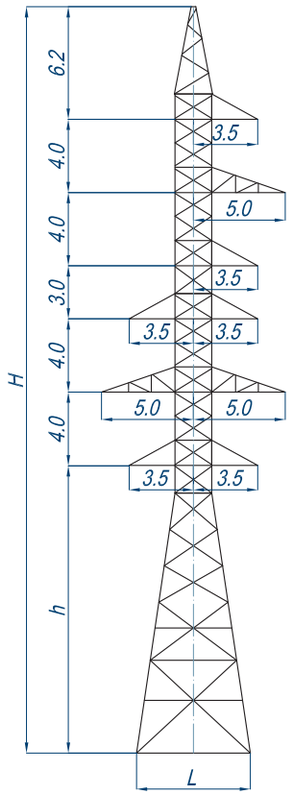

Product Name	УС110–8	УС110–8+5
Glaze Ice Region	I-IV	I-IV
Wind Region	III	III
Wire Model	AC-70 ÷ AC-240	AC-70 ÷ AC-240
Dimensions in Foundation Axis L, m	4,8	6,2
Tower Height H, m	35,7	40,7
Height up to Lower Crossarm h, m	10,5	15,5
Weight of Tower with Zinc Coating, kg	12546	14559
Standard Project Number	3079тм	

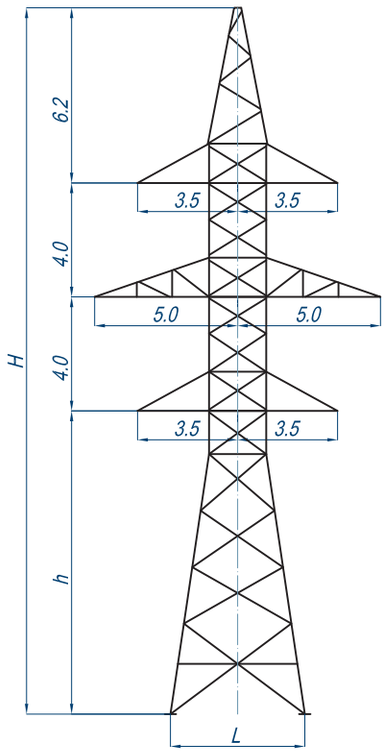

Product Name	У110-2	У110-2+5	У110-2+9	У110-2+14
Glaze Ice Region	I-IV	I-IV	I-IV	I-IV
Wind Region	III	III	III	III
Wire Model	AC-70 ÷ AC-240	AC-70 ÷ AC-240	AC-70 ÷ AC-240	AC-70 ÷ AC-240
Dimensions in Foundation Axis L, m	4,8	6,3	7,5	9,0
Tower Height H, m	24,7	29,7	33,7	38,7
Height up to Lower Crossarm h, m	10,5	15,5	19,5	24,5
Weight of Tower with Zinc Coating, kg	8014	10074	11820	15191
Standard Project Number	3078тм			
Note	Towers are used also in mountainous regions when PTL turn angle is limited. This type of tower can be used on 150kV overhead lines.			

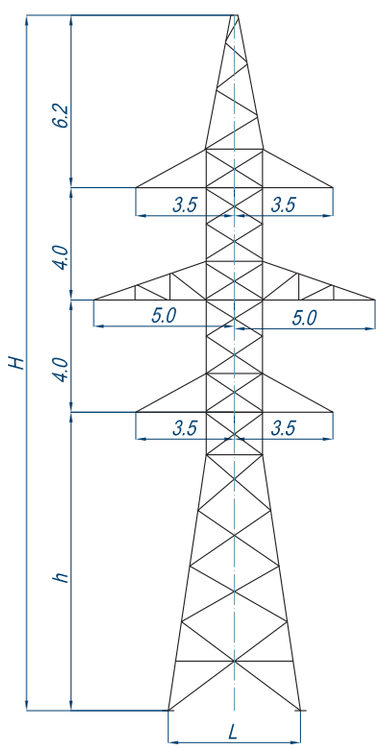

Product Name	У110-2В	У110-2В+5
Glaze Ice Region	I-IV	I-IV
Wind Region	III	III
Wire Model	AC-70 ÷ AC-240	AC-70 ÷ AC-240
Dimensions in Foundation Axis L, m	4,8	6,3
Tower Height H, m	24,7	29,7
Height up to Lower Crossarm h, m	10,5	15,5
Weight of Tower with Zinc Coating, kg	8178	10234
Standard Project Number	3078тм	
Note	Towers designed to switch to horizontal configuration.	

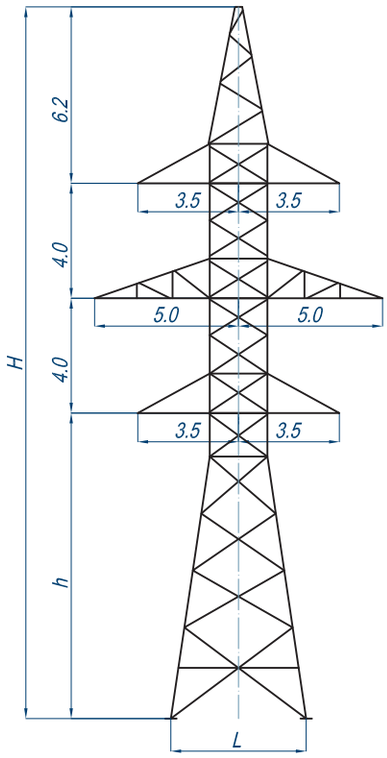

Product Name	У110-2П	У110-2П+5	У110-2П+9	У110-2П+14
Glaze Ice Region	I-IV	I-IV	I-IV	I-IV
Wind Region	III	III	III	III
Wire Model	AC-70 ÷ AC-240	AC-70 ÷ AC-240	AC-70 ÷ AC-240	AC-70 ÷ AC-240
Dimensions in Foundation Axis L, m	4,8	6,3	7,5	9,0
Tower Height H, m	24,7	29,7	33,7	38,7
Height up to Lower Crossarm h, m	10,5	15,5	19,5	24,5
Weight of Tower with Zinc Coating, kg	8168	10224	11975	15344
Standard Project Number	3078тм			
Note	Towers used at transition point to vertical configuration (two tiers).			

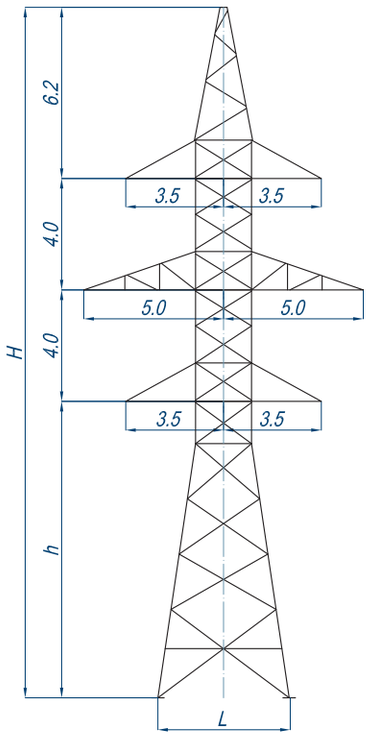

Product Name	У110-2Т	У110-2Т+9
Glaze Ice Region	I-IV	I-IV
Wind Region	III	III
Wire Model	AC-150 ÷ AC-240	AC-150 ÷ AC-240
Dimensions in Foundation Axis L, m	4,8	7,5
Tower Height H, m	24,7	33,7
Height up to Lower Crossarm h, m	10,5	19,5
Weight of Tower with Zinc Coating, kg	8016	11823
Standard Project Number	3078тм	
Note	Possible to use 5m or 8m long lightning rods.	

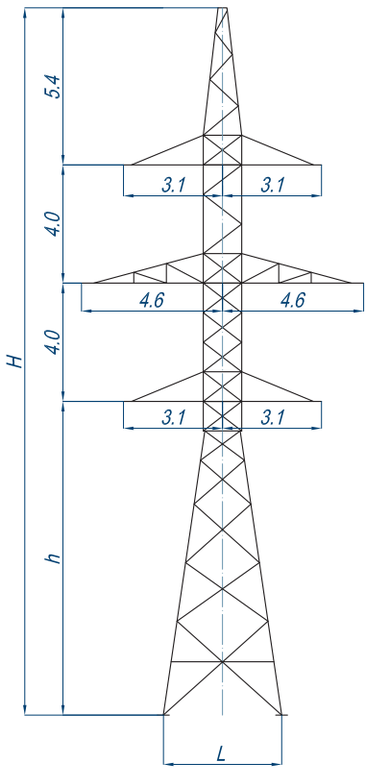

Product Name	У110–4	У110–4+5
Glaze Ice Region	I-IV	I-IV
Wind Region	III	III
Wire Model	AC-70 ÷ AC-150	AC-70 ÷ AC-150
Dimensions in Foundation Axis L, m	4,1	5,6
Tower Height H, m	23,9	28,9
Height up to Lower Crossarm h, m	10,5	15,5
Weight of Tower with Zinc Coating, kg	5450	6851
Standard Project Number	3078тм	
Note	This type of tower can be used on 150kV overhead lines. Towers are normal for overhead lines with up to AC120 wires and they are light (designed for one broken wire) for overhead lines with up to AC150 wires.	

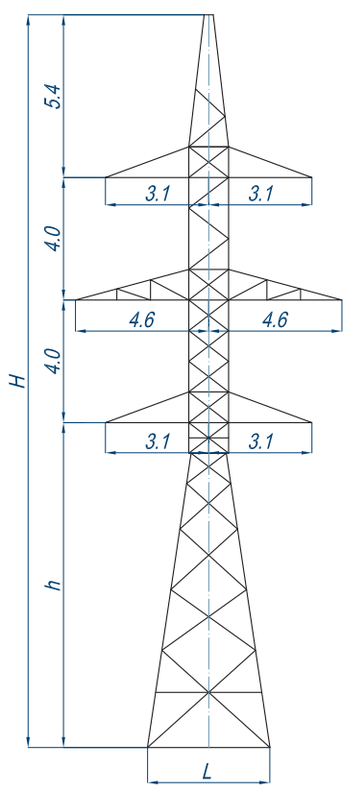

Product Name	У110–4Н	У110–4Н+5
Glaze Ice Region	I-IV	I-IV
Wind Region	III	III
Wire Model	AC-70 ÷ AC-150	AC-70 ÷ AC-150
Dimensions in Foundation Axis L, m	4,1	5,6
Tower Height H, m	23,9	28,9
Height up to Lower Crossarm h, m	10,5	15,5
Weight of Tower with Zinc Coating, kg	4798	6199
Standard Project Number	5778тм	
Note	The upper section of the tower is welded and coated with cold zinc. Towers are similar to У110-4. This type of tower can be used on 150kV overhead lines. Towers are normal for overhead lines with up to AC120 wires and they are light (designed for one broken wire) for overhead lines with up to AC150 wires.	

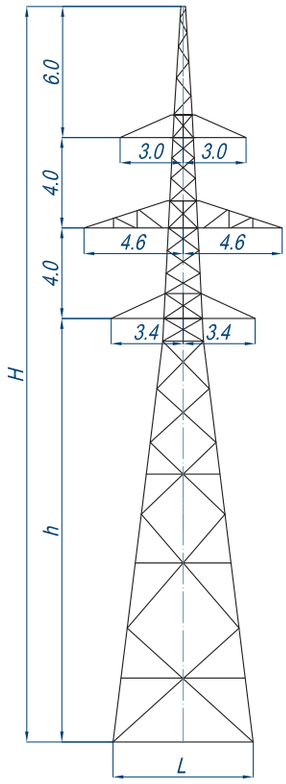

Product Name	1У110-2	1У110-2+5	1У110-2+10	1У110-2+15
Glaze Ice Region	I-IV	I-IV	I-IV	I-IV
Wind Region	III	III	III	III
Wire Model	AC-120	AC-120	AC-120	AC-120
Dimensions in Foundation Axis L, m	3,78	5,03	6,28	7,53
Tower Height H, m	22,6	27,6	32,6	37,6
Height up to Lower Crossarm h, m	8,6	13,6	18,6	23,6
Weight of Tower with Zinc Coating, kg	4443	6158	7595	9340
Standard Project Number	3.407.2-170			
Note	Spacers can be used with this type of tower (spacer weight is not specified). Lightning rod is delivered based on a separate order.			

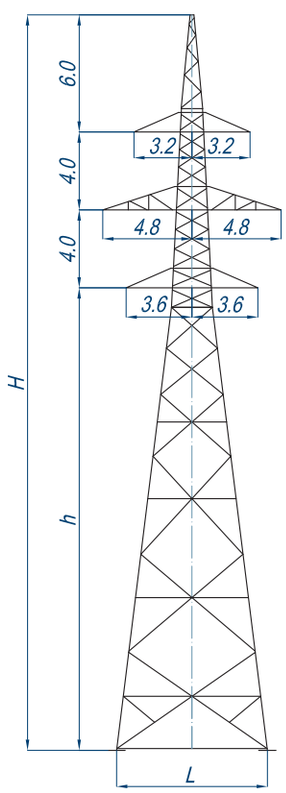

Product Name	1У110-4	1У110-4+5	1У110-4+10	1У110-4+15
Glaze Ice Region	I-IV	I-IV	I-IV	I-IV
Wind Region	III	III	III	III
Wire Model	AC-240	AC-240	AC-240	AC-240
Dimensions in Foundation Axis L, m	4,08	5,33	6,58	7,83
Tower Height H, m	22,6	27,6	32,6	37,6
Height up to Lower Crossarm h, m	8,6	13,6	18,6	23,6
Weight of Tower with Zinc Coating, kg	5853	7834	9543	12063
Standard Project Number	3.407.2-170			
Note	Spacers can be used with this type of tower (spacer weight is not specified). Lightning rod is delivered based on a separate order.			

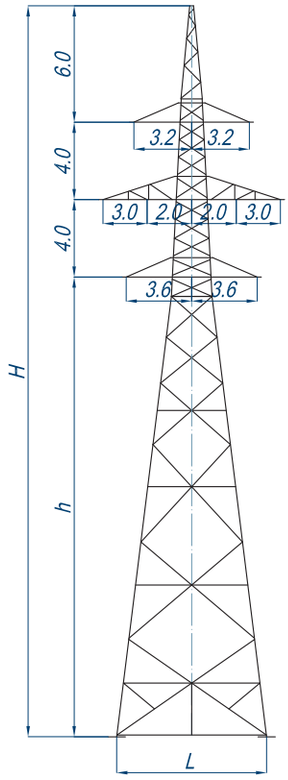

Product Name	1У110-4П	1У110-4П+5	1У110-4П+10	1У110-4П+15
Glaze Ice Region	I-IV	I-IV	I-IV	I-IV
Wind Region	III	III	III	III
Wire Model	AC-240	AC-240	AC-240	AC-240
Dimensions in Foundation Axis L, m	4,08	5,33	6,58	7,83
Tower Height H, m	22,6	27,6	32,6	37,6
Height up to Lower Crossarm h, m	8,6	13,6	18,6	23,6
Weight of Tower with Zinc Coating, kg	5981	7963	9671	12193
Standard Project Number	3.407.2-166			
Note	Towers used at transition point to vertical configuration (two tiers). Spacers can be used with this type of tower (spacer weight is not specified). Lightning rod is delivered based on a separate order.			

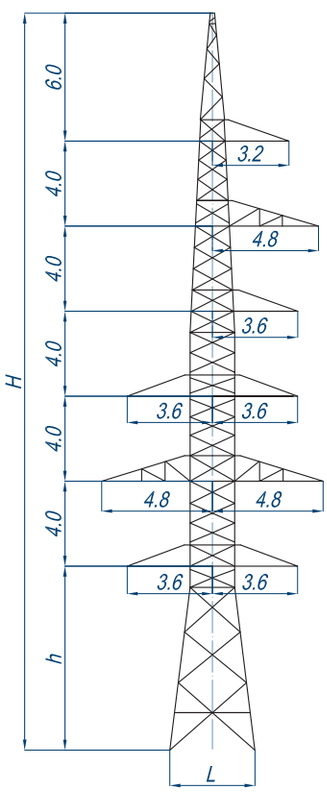

Product Name	1У110-8
Glaze Ice Region	I-IV
Wind Region	III
Wire Model	AC-240
Dimensions in Foundation Axis L, m	4,08
Tower Height H, m	34.66
Height up to Lower Crossarm h, m	8.66
Weight of Tower with Zinc Coating, kg	10205
Standard Project Number	3.407.2-166

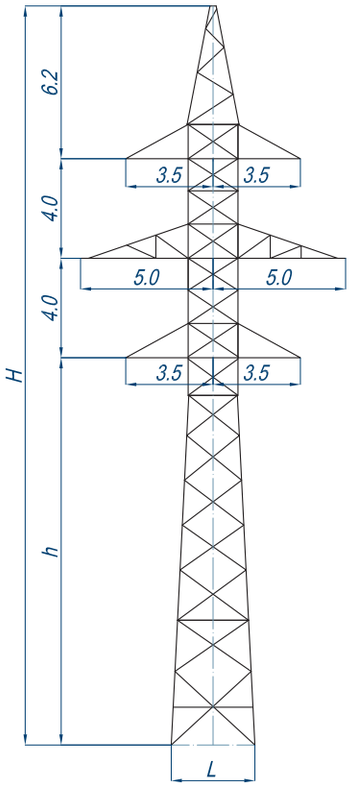

Product Name	УС110-6
Glaze Ice Region	I-IV
Wind Region	III
Wire Model	AC-70 ÷ AC-240
Dimensions in Foundation Axis L, m	3,5
Tower Height H, m	29,7
Height up to Lower Crossarm h, m	15,5
Weight of Tower with Zinc Coating, kg	10826
Standard Project Number	3079тм
Note	Towers designed for in-town use. Towers can be used on 35kV overhead lines. Towers are used when PTL turn angle is limited.

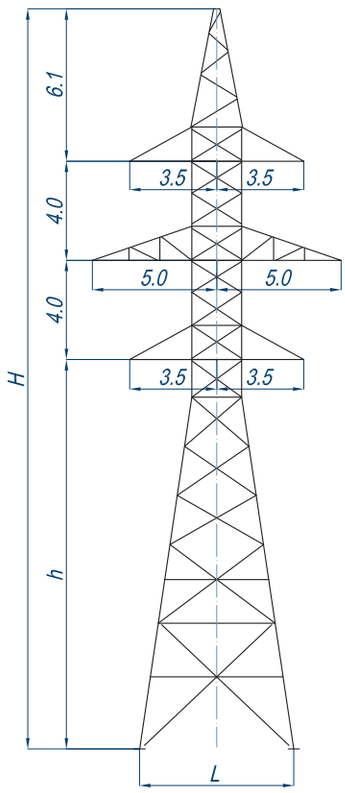

Product Name	У110-2ТС	У110-2ТС+5	У110-2ТС+14
Glaze Ice Region	I-IV	I-IV	I-IV
Wind Region	III	III	III
Wire Model	AC-70 ÷ AC-240	AC-70 ÷ AC-240	AC-70 ÷ AC-240
Dimensions in Foundation Axis L, m	4,8	6,3	8,9
Tower Height H, m	24,6	29,6	38,6
Height up to Lower Crossarm h, m	10,5	15,5	24,5
Weight of Tower with Zinc Coating, kg	7473	9388	14998
Standard Project Number	3.407-119		
Note	Standard towers built using thin walled angle bars.		

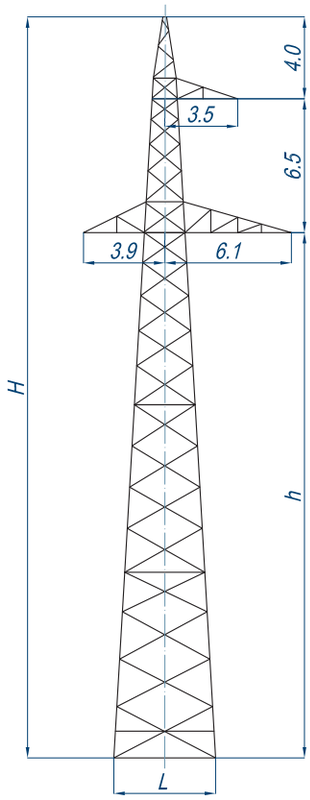

Product Name	П220–3	П220–3+5
Glaze Ice Region	I-IV	I-IV
Wind Region	III	III
Wire Model	AC-300 ÷ AC-400	AC-300 ÷ AC-400
Dimensions in Foundation Axis L, m	5,0x3,13	5,58x3,43
Tower Height H, m	35,8	40,8
Height up to Lower Crossarm h, m	25,3	30,3
Weight of Tower with Zinc Coating, kg	4995	6202
Standard Project Number	3080тм	
Note	Since the length of the corner profile used to make tower chords is too long for a train car, every piece of chord is made to be attached on site.	

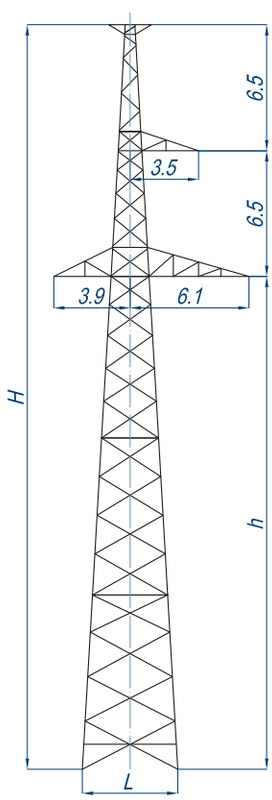

Product Name	П220–3Т	П220–3Т+5
Glaze Ice Region	I-IV	I-IV
Wind Region	III	III
Wire Model	AC-300 ÷ AC-400	AC-300 ÷ AC-400
Dimensions in Foundation Axis L, m	5,0x3,13	5,58x3,13
Tower Height H, m	38,3	43,3
Height up to Lower Crossarm h, m	25,3	30,3
Weight of Tower with Zinc Coating, kg	5180	6388
Standard Project Number	3080тм	
Note	Towers with ground wire support for two cables. Since the length of the corner profile used to make tower chords is too long for a train car, every piece of chord is made to be attached on site.	

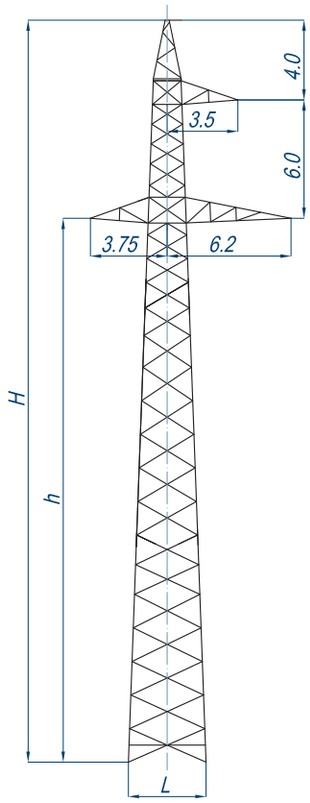

Product Name	2П220-1	2П220-1-6,8	2П220-1-11,5
Glaze Ice Region	I-IV	I-IV	I-IV
Wind Region	V	V	V
Wire Model	AC-240 ÷ AC-400	AC-240 ÷ AC-400	AC-240 ÷ AC-400
Dimensions in Foundation Axis L, m	3,99	3,49	3,14
Tower Height H, m	37,5	30,7	26,0
Height up to Lower Crossarm h, m	27,5	20,7	16,0
Weight of Tower with Zinc Coating, kg	4666	3760	3173
Standard Project Number		3.407.2-145	

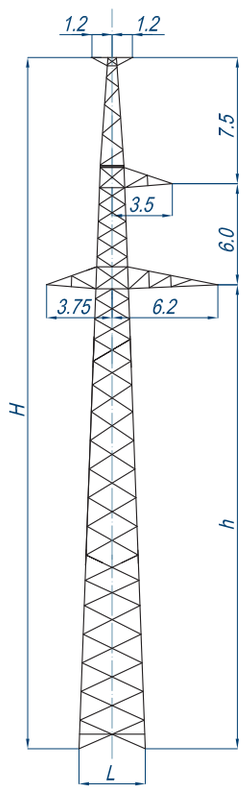

Product Name	2П220-1т	2П220-1т-6,8	2П220-1т-11,5
Glaze Ice Region	I-IV	I-IV	I-IV
Wind Region	V	V	V
Wire Model	AC-240 ÷ AC-400	AC-240 ÷ AC-400	AC-240 ÷ AC-400
Dimensions in Foundation Axis L, m	3,99	3,49	3,14
Tower Height H, m	41,0	34,2	29,5
Height up to Lower Crossarm h, m	27,5	20,7	16,0
Weight of Tower with Zinc Coating, kg	4862	3956	3370
Standard Project Number		3.407.2-145	
Note	Towers with ground wire support for two cables.		

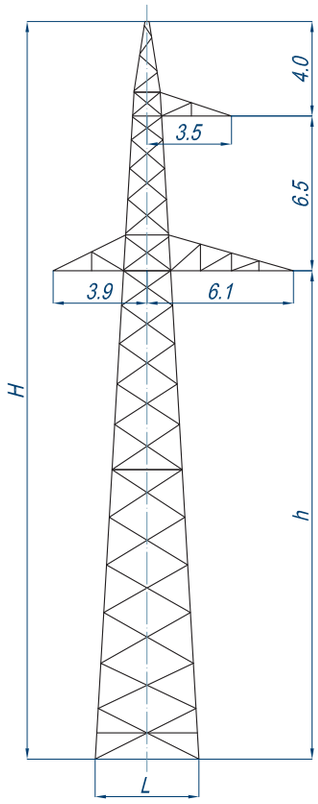

Product Name	ПС220-3
Glaze Ice Region	I-IV
Wind Region	III
Wire Model	AC-300 ÷ AC-400
Dimensions in Foundation Axis L, m	4,42x2,84
Tower Height H, m	30,8
Height up to Lower Crossarm h, m	20,3
Weight of Tower with Zinc Coating, kg	4327
Standard Project Number	3080тм
Note	Since the length of the corner profile used to make tower chords is too long for a train car, every piece of chord is made to be attached onsite.

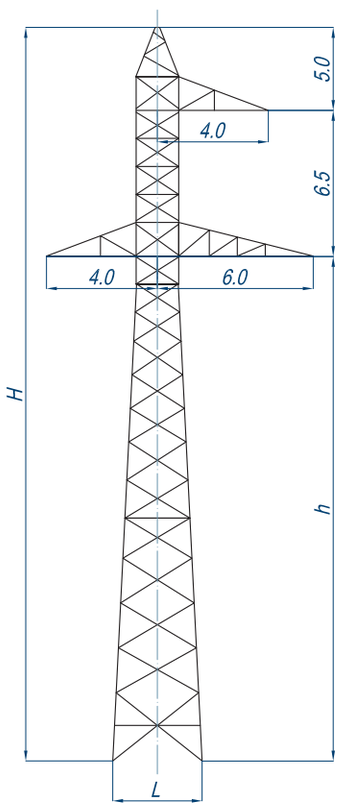

Product Name	ПС220-5
Glaze Ice Region	III-IV
Wind Region	III
Wire Model	AC-300 ÷ AC-400
Dimensions in Foundation Axis L, m	4,1
Tower Height H, m	32,6
Height up to Lower Crossarm h, m	22,5
Weight of Tower with Zinc Coating, kg	5795
Standard Project Number	3081тм
Note	Intermediate tower designed for mountainous regions.

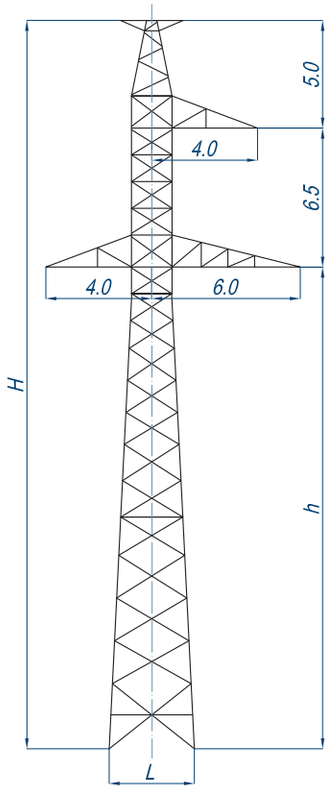

Product Name	ПС220-5Т
Glaze Ice Region	III-IV
Wind Region	III
Wire Model	AC-300 ÷ AC-400
Dimensions in Foundation Axis L, m	4,1
Tower Height H, m	34,0
Height up to Lower Crossarm h, m	22,5
Weight of Tower with Zinc Coating, kg	5968
Standard Project Number	3081тм
Note	Towers with ground wire support for two cables designed for mountainous regions.

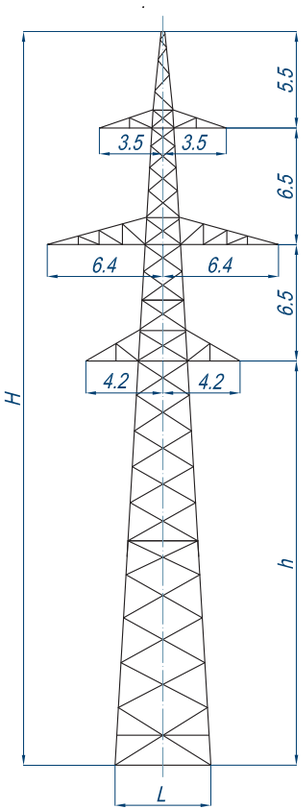

Product Name	П220-2	П220-2+5
Glaze Ice Region	I-IV	I-IV
Wind Region	III	III
Wire Model	AC-300 ÷ AC400	AC-300 ÷ AC400
Dimensions in Foundation Axis L, m	5,4x3,334	5,97x3,622
Tower Height H, m	41,0	46,0
Height up to Lower Crossarm h, m	22,5	27,5
Weight of Tower with Zinc Coating, kg	6514	8022
Standard Project Number	3080тм	
Note	Since the length of the corner profile used to make tower chords is too long for a train car, every piece of chord is made to be attached on site.	

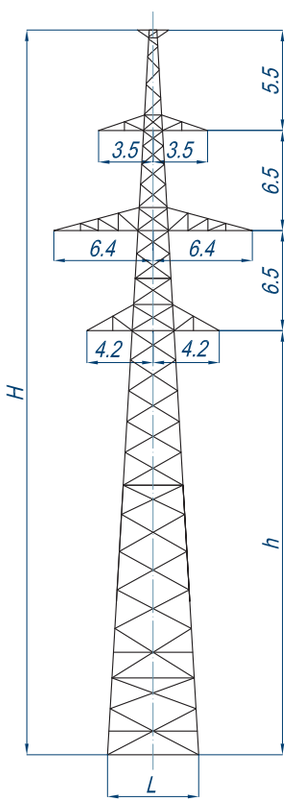

Product Name	П220-2Т	П220-2Т+5
Glaze Ice Region	I-IV	I-IV
Wind Region	III	III
Wire Model	AC-300 ÷ AC400	AC-300 ÷ AC400
Dimensions in Foundation Axis L, m	5,4x3,334	5,97x3,622
Tower Height H, m	41,0	46,0
Height up to Lower Crossarm h, m	22,5	27,5
Weight of Tower with Zinc Coating, kg	6636	8147
Standard Project Number	3080тм	
Note	Since the length of the corner profile used to make tower chords is too long for a train car, every piece of chord is made to be attached on site.	

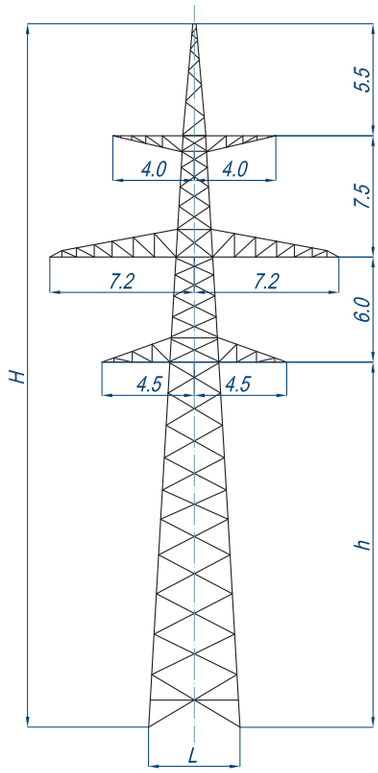

Product Name	ЗП220-2	ЗП220-2-5,0	ЗП220-2-11,5
Glaze Ice Region	I-IV	I-IV	I-IV
Wind Region	III	III	III
Wire Model	AC240 ÷ AC400	AC240 ÷ AC400	AC240 ÷ AC400
Dimensions in Foundation Axis L, m	6,06x4,39	5,328x4,01	4,355x3,52
Tower Height H, m	45,0	40,0	33,5
Height up to Lower Crossarm h, m	26,0	21,0	14,5
Weight of Tower with Zinc Coating, kg	7288	6330	5132
Standard Project Number		3.407.2-156	
Note	Standard towers for areas with polluted air.		

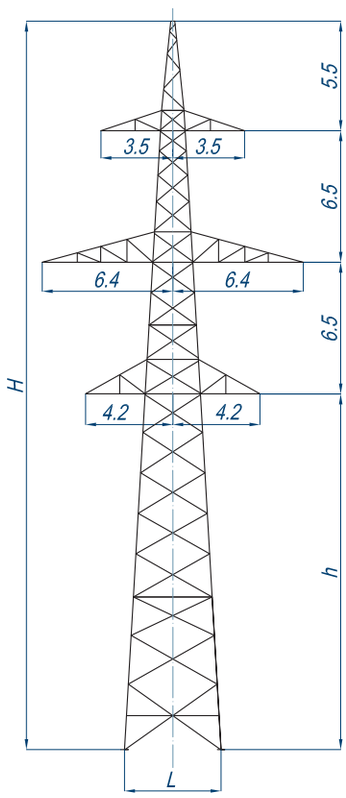

Product Name	ПС220-2
Glaze Ice Region	III-IV
Wind Region	III
Wire Model	AC300 ÷ AC400
Dimensions in Foundation Axis L, m	4,826x3,04
Tower Height H, m	36,0
Height up to Lower Crossarm h, m	17,5
Weight of Tower with Zinc Coating, kg	5736
Standard Project Number	3080тм
Note	Since the length of the corner profile used to make tower chords is too long for a train car, every piece of chord is made to be attached on site.

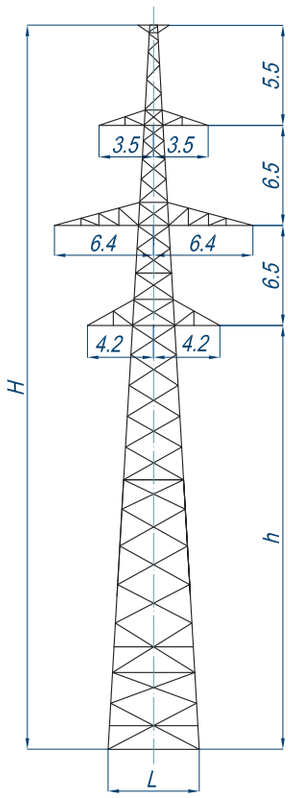

Product Name	ПС220-2Т
Glaze Ice Region	I-IV
Wind Region	III
Wire Model	AC-300 ÷ AC-400
Dimensions in Foundation Axis L, m	4,826x3,04
Tower Height H, m	36,0
Height up to Lower Crossarm h, m	17,5
Weight of Tower with Zinc Coating, kg	5861
Standard Project Number	3080тм
Note	Towers with ground wire support for two cables. Since the length of the corner profile used to make tower chords is too long for a train car, every piece of chord is made to be attached on site.

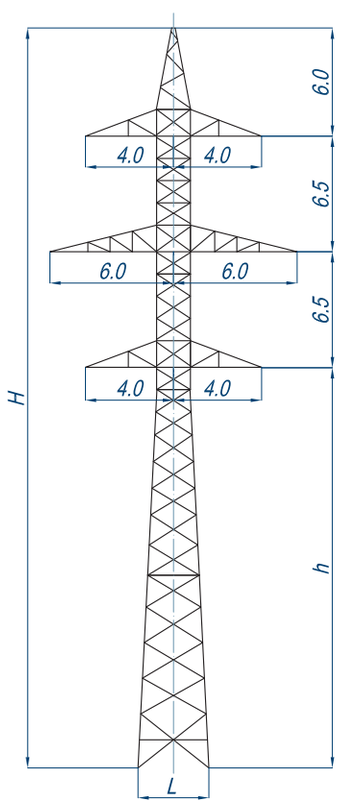

Product Name	ПС220-6	ПС220-6+1,8
Glaze Ice Region	III -IV	III -IV
Wind Region	V	V
Wire Model	AC-300 ÷ AC-400	AC-300 ÷ AC-400
Dimensions in Foundation Axis L, m	4,1	5,5x4,26
Tower Height H, m	41,5	43,3
Height up to Lower Crossarm h, m	22,5	24,3
Weight of Tower with Zinc Coating, kg	8732	10093
Standard Project Number	3081тм	
Note	Intermediate tower designed for mountainous regions.	

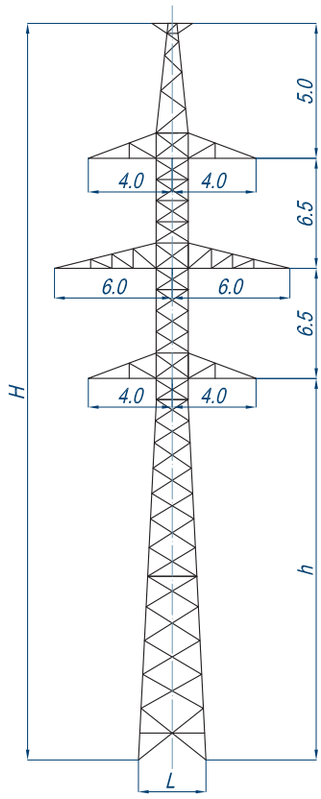

Product Name	ПС220-6Т	ПС220-6Т+1,8
Glaze Ice Region	III-IV	III-IV
Wind Region	III	III
Wire Model	AC-300 ÷ AC-400	AC-300 ÷ AC-400
Dimensions in Foundation Axis L, m	4,1	5,5x4,26
Tower Height H, m	40,5	42,3
Height up to Lower Crossarm h, m	22,5	24,3
Weight of Tower with Zinc Coating, kg	8814	10182
Standard Project Number	3081тм	
Note	Towers with ground wire support for two cables. Towers designed for mountainous regions.	

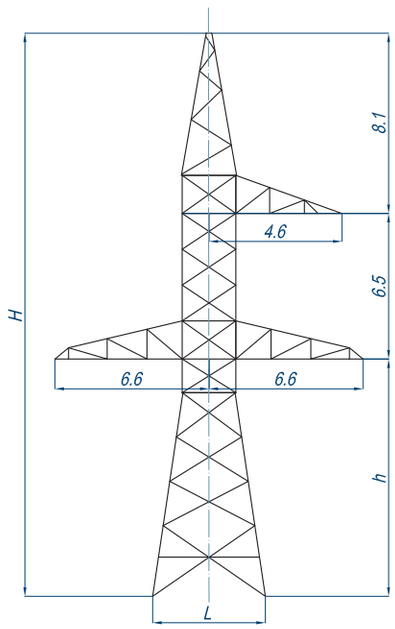

Product Name	У220-1	У220-1+5	У220-1+9	У220-1+14
Glaze Ice Region	I-IV	I-IV	I-IV	I-IV
Wind Region	III	III	III	III
Wire Model	AC-300 ÷ AC-400	AC-300 ÷ AC-400	AC-300 ÷ AC-400	AC-300÷ AC-400
Dimensions in Foundation Axis L, m	5,2	6,7	7,9	9,4
Tower Height H, m	25,1	30,1	34,1	39,1
Height up to Lower Crossarm h, m	10,5	15,5	19,5	24,5
Weight of Tower with Zinc Coating, kg	8744	11056	12574	16375
Standard Project Number	3080тм			
Note	Spacers can be used with this type of tower (spacer weight is not specified).			

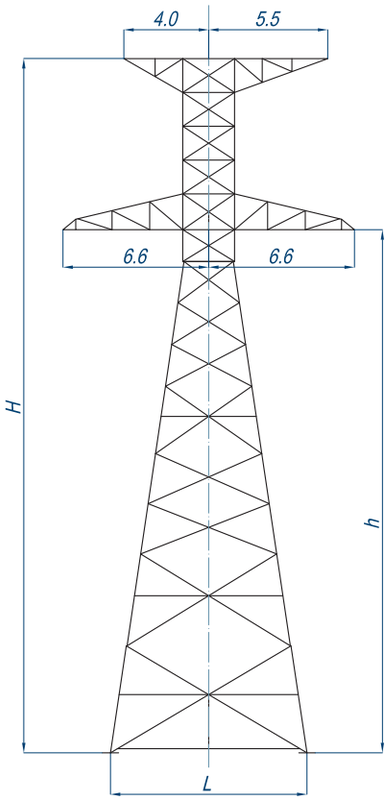

Product Name	У220–3	У220–3+5	У220–3+9	У220–3+14
Glaze Ice Region	I-IV	I-IV	I-IV	I-IV
Wind Region	III	III	III	III
Wire Model	AC-300 ÷ AC-400	AC-300 ÷ AC-400	AC-300÷ AC-400	AC-300÷ AC-400
Dimensions in Foundation Axis L, m	5,2	6,7	7,9	9,4
Tower Height H, m	18,6	23,6	27,6	32,6
Height up to Lower Crossarm h, m	10,5	15,5	19,5	24,5
Weight of Tower with Zinc Coating, kg	7314	9588	11096	14897
Standard Project Number	3080тм			
Note	Towers with horizontal configuration of wires. Spacers can be used with this type of tower (spacer weight is not specified).			

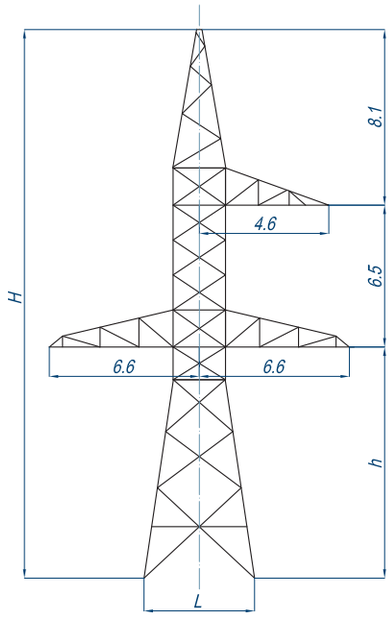

Product Name	У220–7	У220–7+5
Glaze Ice Region	I-IV	I-IV
Wind Region	III	III
Wire Model	AC-300	AC-300
Dimensions in Foundation Axis L, m	5,2	6,7
Tower Height H, m	25,1	30,1
Height up to Lower Crossarm h, m	10,5	15,5
Weight of Tower with Zinc Coating, kg	6553	8376
Standard Project Number	3.407-120	
Note	Tower designed for smaller turn angles.	

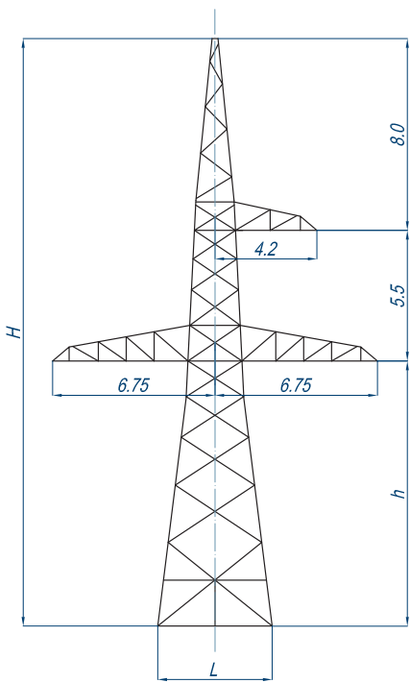

Product Name	1У220–1	1У220–1+5	1У220–1+10	1У220–1+15
Glaze Ice Region	I-IV	I-IV	I-IV	I-IV
Wind Region	III-V	III-V	III-V	III-V
Wire Model	AC-240	AC-240	AC-240	AC-240
Dimensions in Foundation Axis L, m	4,91	6,16	7,41	8,66
Tower Height H, m	24,6	29,6	34,6	39,6
Height up to Lower Crossarm h, m	11,1	16,1	21,1	26,1
Weight of Tower with Zinc Coating, kg	6565	8421	10717	13555
Standard Project Number	3.407.2-145			
Note	Spacers can be used with this type of tower (spacer weight is not specified).			

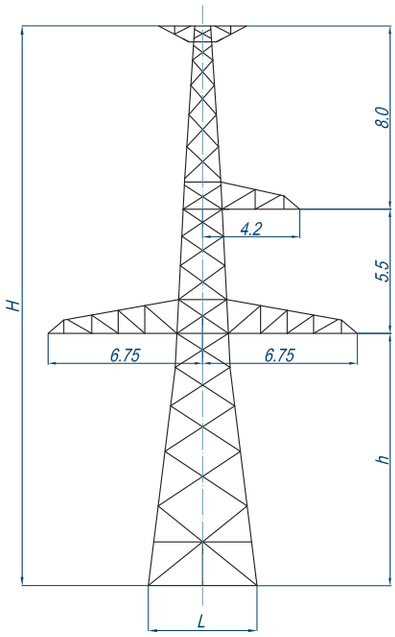

Product Name	1У220-1T	1У220-1T+5	1У220-1T+10	1У220-1T+15
Glaze Ice Region	I-IV	I-IV	I-IV	I-IV
Wind Region	III-V	III-V	III-V	III-V
Wire Model	AC-240	AC-240	AC-240	AC-240
Dimensions in Foundation Axis L, m	4,91	6,16	7,41	8,66
Tower Height H, m	24,6	29,6	34,6	39,6
Height up to Lower Crossarm h, m	11,1	16,1	21,1	26,1
Weight of Tower with Zinc Coating, kg	7210	9065	11362	14199
Standard Project Number	3.407.2-145			
Note	Towers with ground wire support for two cables. Spacers can be used with this type of tower (spacer weight is not specified).			

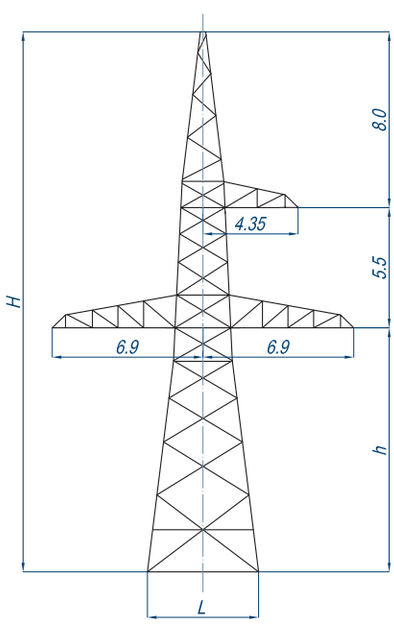

Product Name	1У220-3	1У220-3+5	1У220-3+10	1У220-3+15
Glaze Ice Region	I-IV	I-IV	I-IV	I-IV
Wind Region	III-V	III-V	III-V	III-V
Wire Model	AC-400	AC-400	AC-400	AC-400
Dimensions in Foundation Axis L, m	5,21	6,46	7,71	8,96
Tower Height H, m	24,6	29,6	34,6	39,6
Height up to Lower Crossarm h, m	11,1	16,1	21,1	26,1
Weight of Tower with Zinc Coating, kg	8478	10860	13454	17017
Standard Project Number	3407.2-145			

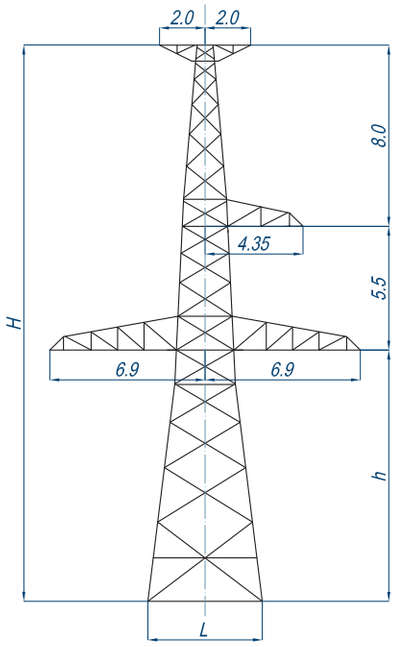

Product Name	1У220-3Т	1У220-3Т+5	1У220-3Т+10	1У220-3Т+15
Glaze Ice Region	I-IV	I-IV	I-IV	I-IV
Wind Region	III-V	III-V	III-V	III-V
Wire Model	AC-400	AC-400	AC-400	AC-400
Dimensions in Foundation Axis L, m	5,21	6,46	7,71	8,96
Tower Height H, m	24,6	29,6	34,6	39,6
Height up to Lower Crossarm h, m	11,1	16,1	21,1	26,1
Weight of Tower with Zinc Coating, kg	9135	11517	14111	17735
Standard Project Number	3.407.2-145			
Note	Towers with ground wire support for two cables.			

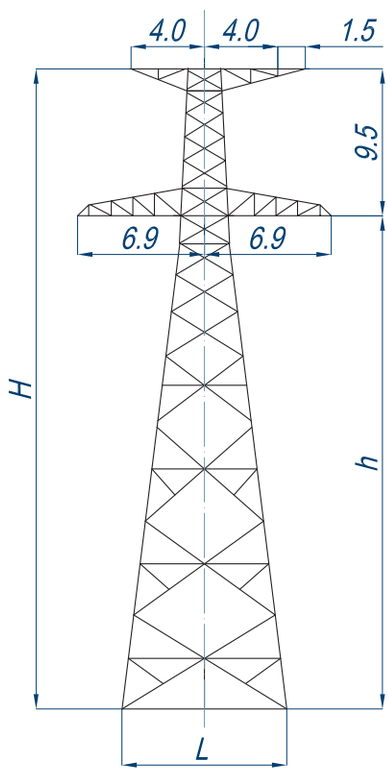

Product Name	1У220-5	1У220-5+5	1У220-5+10	1У220-5+15
Glaze Ice Region	I-IV	I-IV	I-IV	I-IV
Wind Region	III	III	III	III
Wire Model	AC-400	AC-400	AC-400	AC-400
Dimensions in Foundation Axis L, m	5,21	6,46	7,71	8,96
Tower Height H, m	19,1	24,1	29,1	34,1
Height up to Lower Crossarm h, m	11,1	16,1	21,1	26,1
Weight of Tower with Zinc Coating, kg	7521	9922	12522	16098
Standard Project Number	3.407.2-156			
Note	Towers with horizontal configuration of wires. Tower designed for areas with polluted air.			

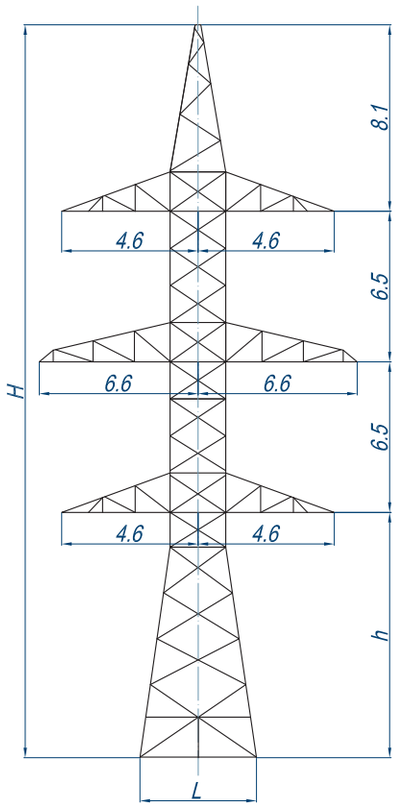

Product Name	У220-2	У220-2+5	У220-2+9	У220-2+14
Glaze Ice Region	I-IV	I-IV	I-IV	I-IV
Wind Region	III	III	III	III
Wire Model	AC-300÷ AC-400	AC-300÷ AC-400	AC-300÷ AC-400	AC-300÷ AC-400
Dimensions in Foundation Axis L, m	5,2	6,7	7,9	9,4
Tower Height H, m	31,6	36,6	40,6	45,6
Height up to Lower Crossarm h, m	10,5	15,5	19,5	24,5
Weight of Tower with Zinc Coating, kg	14724	17811	19661	23219
Standard Project Number	3080тм			
Note	Spacers can be used with this type of tower (spacer weight is not specified).			

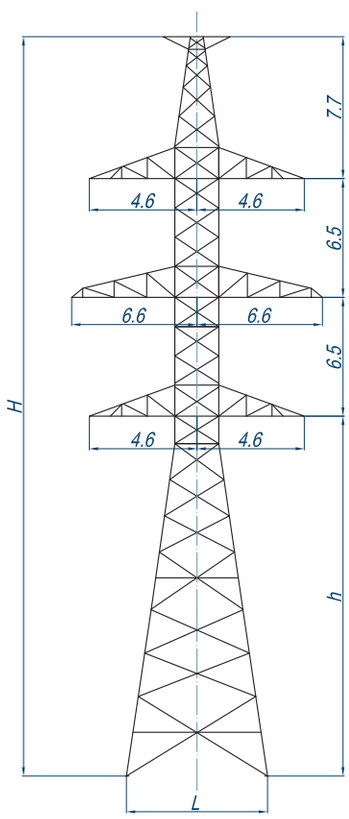

Product Name	У220-2Т	У220-2Т+5	У220-2Т+9	У220-2Т+14
Glaze Ice Region	I-IV	I-IV	I-IV	I-IV
Wind Region	III	III	III	III
Wire Model	AC-300÷ AC-400	AC-300÷ AC-400	AC-300÷ AC-400	AC-300÷ AC-400
Dimensions in Foundation Axis L, m	5,2	6,7	7,9	9,4
Tower Height H, m	31,2	36,2	40,2	45,2
Height up to Lower Crossarm h, m	10,5	15,5	19,5	24,5
Weight of Tower with Zinc Coating, kg	15293	18387	20229	24389
Standard Project Number	3080тм			
Note	Towers with ground wire support for two cables. Spacers can be used with this type of tower (spacer weight is not specified).			

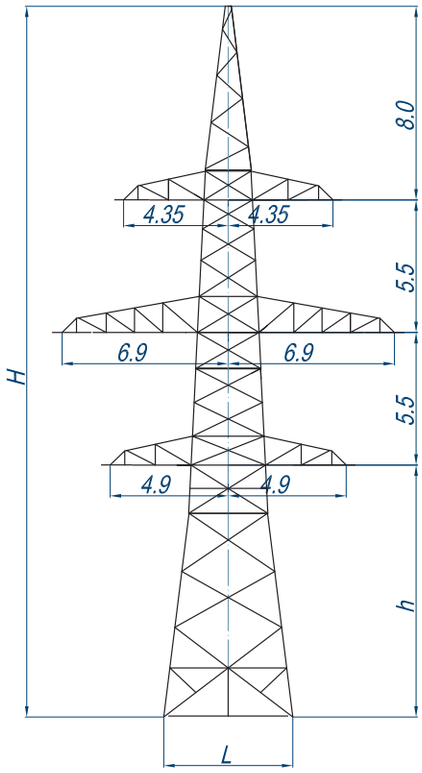

Product Name	1У220-4	1У220-4+5	1У220-4+10	1У220-4+15
Glaze Ice Region	I-IV	I-IV	I-IV	I-IV
Wind Region	III	III	III	III
Wire Model	2xAC-400	2xAC-400	2xAC-400	2xAC-400
Dimensions in Foundation Axis L, m	5,52	6,77	8,02	9,27
Tower Height H, m	29,4	34,4	39,4	44,4
Height up to Lower Crossarm h, m	10,4	15,4	20,4	25,4
Weight of Tower with Zinc Coating, kg	12631	15307	18321	22430
Standard Project Number	3.407.2-145			
Note	Spacers can be used with this type of tower (spacer weight is not specified).			

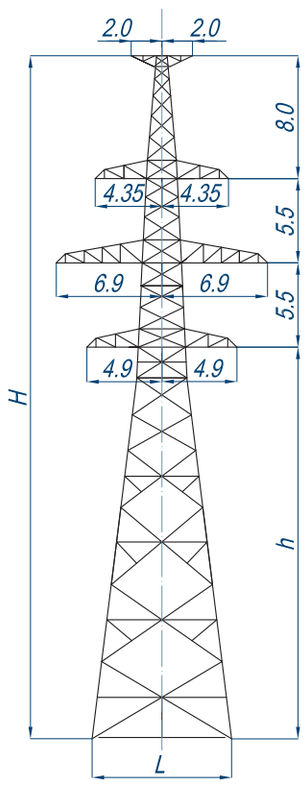

Product Name	1У220-4T	1У220-4T+5	1У2204T+10	У220-4T+15
Glaze Ice Region	I-IV	I-IV	I-IV	I-IV
Wind Region	III	III	III	III
Wire Model	2xAC400	2xAC400	2xAC400	AC400
Dimensions in Foundation Axis L, m	5,52	6,77	8,02	9,27
Tower Height H, m	29,4	34,4	39,4	44,4
Height up to Lower Crossarm h, m	10,4	15,4	20,4	25,4
Weight of Tower with Zinc Coating, kg	13311	15987	19002	23110
Standard Project Number	3.407.2-145			
Note	Towers with ground wire support for two cables. Spacers can be used with this type of tower (spacer weight is not specified).			

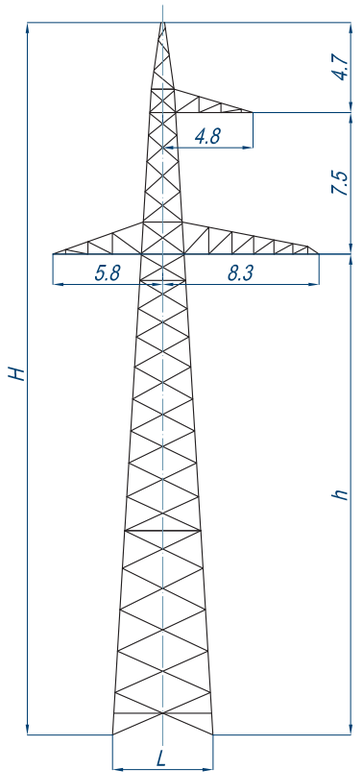

Product Name	П330-3	П330-3+5
Glaze Ice Region	I-II	I-II
Wind Region	III	III
Wire Model	AC-300 ÷ AC-400	AC-300 ÷ AC-400
Dimensions in Foundation Axis L, m	5,42x3,35	6,0x3,6
Tower Height H, m	37,7	42,7
Height up to Lower Crossarm h, m	25,5	30,5
Weight of Tower with Zinc Coating, kg	6426	7860
Standard Project Number	3080тм	

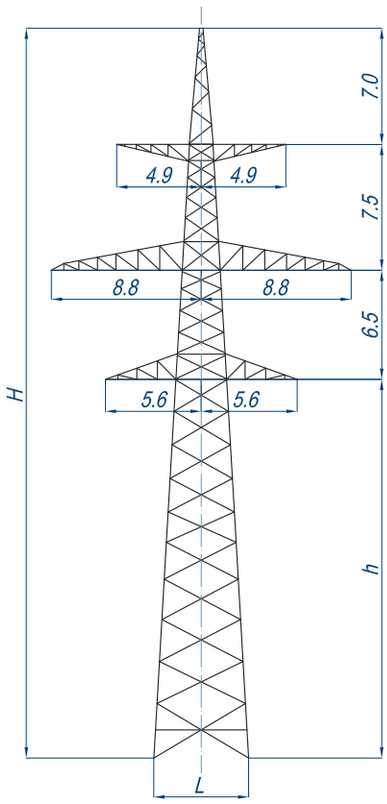

Product Name	П330-2
Glaze Ice Region	I-IV
Wind Region	III
Wire Model	AC-300 ÷ AC-400
Dimensions in Foundation Axis L, m	5,75x3,683
Tower Height H, m	43,5
Height up to Lower Crossarm h, m	22,5
Weight of Tower with Zinc Coating, kg	10778
Standard Project Number	3080тм

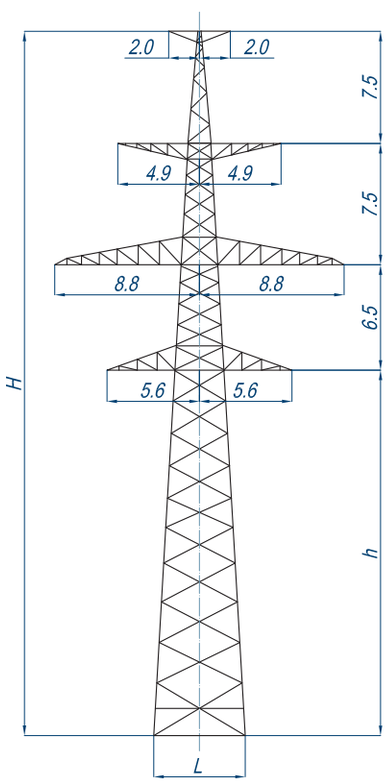

Product Name	П330-2Т
Glaze Ice Region	I-IV
Wind Region	III
Wire Model	AC-300 ÷ AC-400
Dimensions in Foundation Axis L, m	5,75x3,683
Tower Height H, m	44,0
Height up to Lower Crossarm h, m	22,5
Weight of Tower with Zinc Coating, kg	11087
Standard Project Number	3080тм
Note	Towers with ground wire support for two cables.

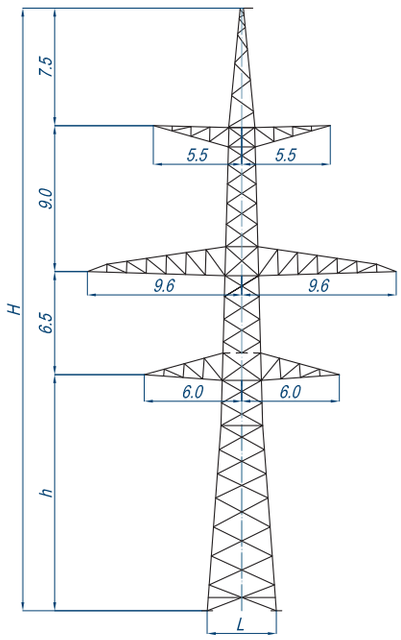

Product Name	ЗП330-2	ЗП330-2-5,0	ЗП330-2-11,5
Glaze Ice Region	I-IV	I-IV	I-IV
Wind Region	III	III	III
Wire Model	AC240÷AC400	AC240÷AC400	AC240÷AC400
Dimensions in Foundation Axis L, m	4,4x6,07	4,03x5,34	3,54x4,37
Tower Height H, m	49,0	44,0	37,5
Height up to Lower Crossarm h, m	26,0	21,0	14,5
Weight of Tower with Zinc Coating, kg	11052	9947	8473
Standard Project Number		3.407.2-156	
Note	Tower designed for areas with polluted air.		

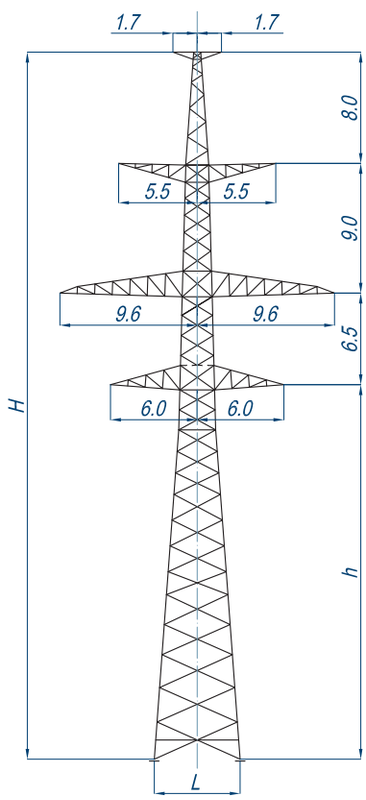

Product Name	ЗП330-2Т	ЗП330-2т-5,0	ЗП330-2т-11,5
Glaze Ice Region	I-IV	I-IV	I-IV
Wind Region	I-III	I-III	I-III
Wire Model	AC240÷AC400	AC240÷AC400	AC240÷AC400
Dimensions in Foundation Axis L, m	4,4x6,07	5,34x4,03	3,54x4,37
Tower Height H, m	49,5	44,5	38,0
Height up to Lower Crossarm h, m	26,0	21,0	14,5
Weight of Tower with Zinc Coating, kg	11258	10154	8678
Standard Project Number		3.407.2-156	
Note	Tower designed for areas with polluted air. Towers with ground wire support for two cables.		

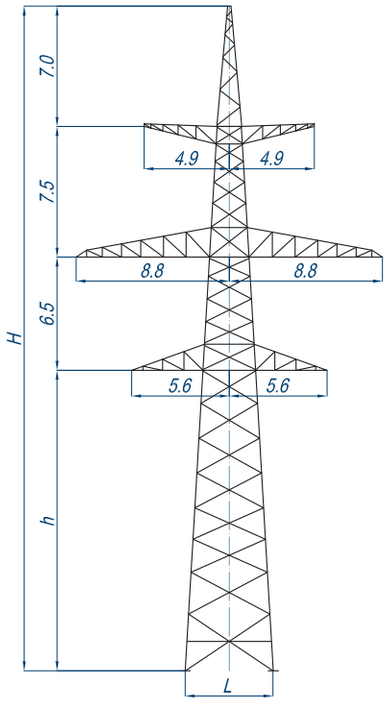

Product Name	ПС330–2
Glaze Ice Region	I-IV
Wind Region	III
Wire Model	AC-300 ÷ AC-400
Dimensions in Foundation Axis L, m	5,17x3,38
Tower Height H, m	38,5
Height up to Lower Crossarm h, m	17,5
Weight of Tower with Zinc Coating, kg	9548
Standard Project Number	3080тм

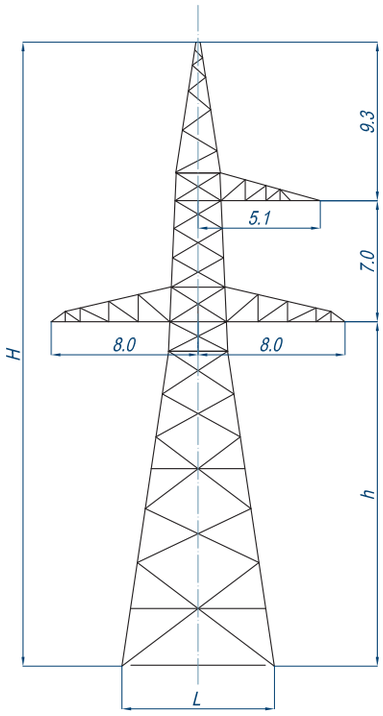

Product Name	У330-1	У330-1+5	У330-1+9
Glaze Ice Region	I-IV	I-IV	I-IV
Wind Region	III	III	III
Wire Model	2 x AC-300÷ 2 x AC-400	2 x AC-300÷ 2 x AC-400	2 x AC-300÷ 2 x AC-400
Dimensions in Foundation Axis L, m	6,24	7,72	8,94
Tower Height H, m	27,0	32,0	36,0
Height up to Lower Crossarm h, m	10,7	15,7	19,7
Weight of Tower with Zinc Coating, kg	13659	17167	19813
Standard Project Number	3080тм		
Note	Weight of the tower including spacers.		

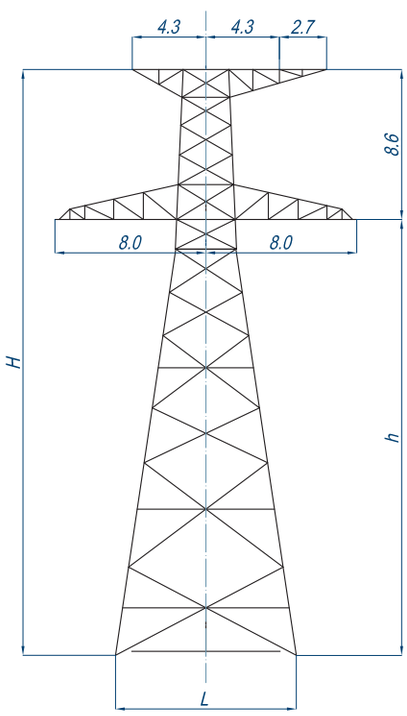

Product Name	У330-3	У330-3+5	У330-3+9	У330-3+14
Glaze Ice Region	I-IV	I-IV	I-IV	I-IV
Wind Region	III	III	III	III
Wire Model	2x AC-300÷ 2x AC-400	2x AC-300÷ 2x AC-400	2x AC-300÷ 2x AC-400	2x AC-300÷ 2x AC-400
Dimensions in Foundation Axis L, m	6,24	7,72	8,95	10,45
Tower Height H, m	19,3	24,3	28,3	33,3
Height up to Lower Crossarm h, m	10,7	15,7	19,7	24,7
Weight of Tower with Zinc Coating, kg	10660	13547	16525	21324
Standard Project Number	3080тм			
Note	Towers with horizontal configuration of wires. Spacers can be used with this type of tower (spacer weight is not specified).			

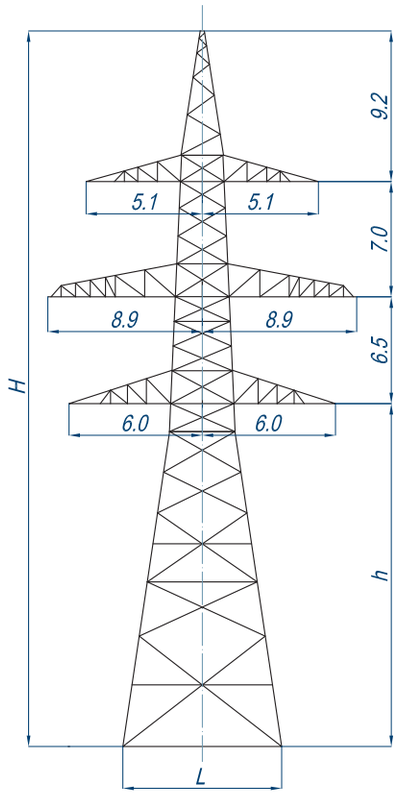

Product Name	У330–2	У330–2+9
Glaze Ice Region	I-IV	I-IV
Wind Region	III	III
Wire Model	2x AC-300÷ 2x AC-400	2x AC-300÷ 2x AC-400
Dimensions in Foundation Axis L, m	6,85	9,55
Tower Height H, m	33,4	42,4
Height up to Lower Crossarm h, m	10,7	19,7
Weight of Tower with Zinc Coating, kg	23871	32009
Standard Project Number	3080тм	
Note	Weight of the tower including spacers.	

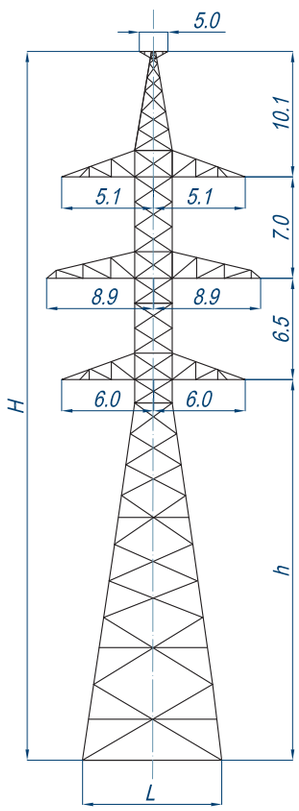

Product Name	У330–2т	У330–2т+5	У330–2т+9	У330–2т+14
Glaze Ice Region	I-IV	I-IV	I-IV	I-IV
Wind Region	III	III	III	III
Wire Model	2xAC-300÷ 2xAC-400	2xAC-300÷ 2xAC-400	2xAC-300÷ 2xAC-400	2xAC-300÷ 2xAC-400
Dimensions in Foundation Axis L, m	6,85	8,35	9,55	11,0
Tower Height H, m	34,3	39,3	43,3	48,3
Height up to Lower Crossarm h, m	10,7	15,7	19,7	24,7
Weight of Tower with Zinc Coating, kg	24382	28826	32062	38652
Standard Project Number	3080тм			
Note	Spacers can be used with this type of tower (spacer weight is not specified). Towers with ground wire support for two cables.			

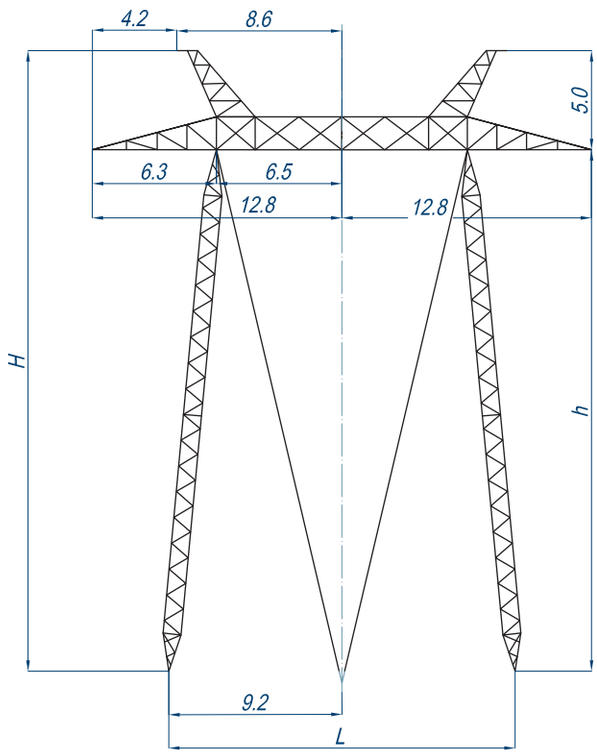

Product Name	ПБ4
Glaze Ice Region	II-IV
Wind Region	VI
Wire Model	3xAC400 ÷ 3xAC500
Dimensions in Foundation Axis L, m	18,4
Tower Height H, m	32.2
Высота до нижней траверсы h, м	27,2
Weight of Tower with Zinc Coating, kg	8118
Standard Project Number	3539тм

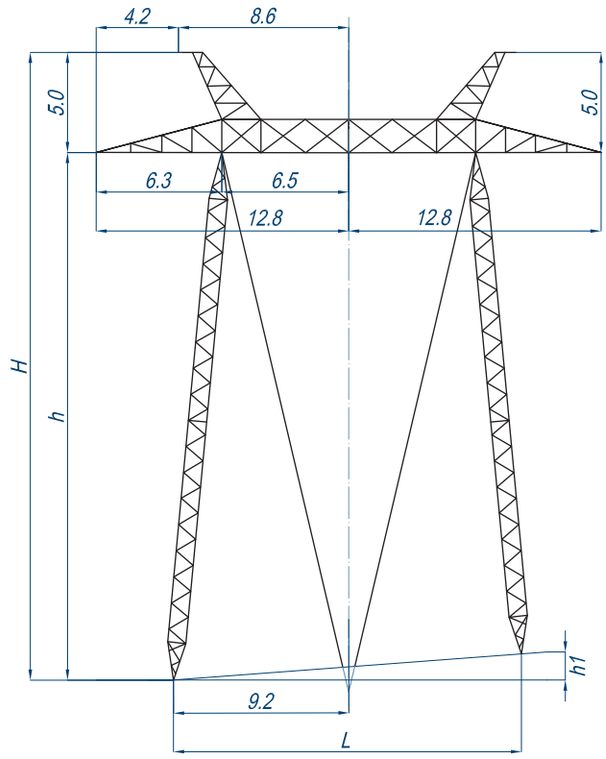

Product Name	ПБ4–I	ПБ4–II	ПБ4–III	ПБ4–IV
Glaze Ice Region	II-IV	II-IV	II-IV	II-IV
Wind Region	VI	VI	VI	VI
Wire Model	3xAC400 3xAC500	3xAC400 3xAC500	3xAC400 3xAC500	3xAC400 3xAC500
Dimensions in Foundation Axis L, m	18,265	18,13	17,995	17,86
Tower Height H, m	32,2	32,2	32,2	32,2
Height up to Lower Crossarm h, m	27,2	27,2	27,2	27,2
Косогорность h1, м	1,27	2,53	3,8	5,06
Weight of Tower with Zinc Coating, kg	8039	7960	7882	7803
Part Number of Installation Diagram	3539тм			

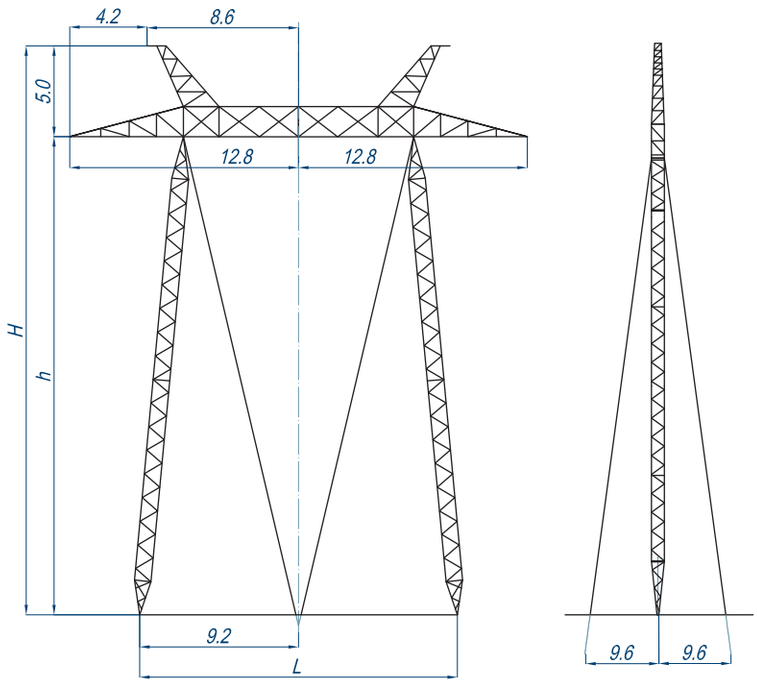

Product Name	ПБ42
Glaze Ice Region	V
Wind Region	VI
Wire Model	3xAC-300
Dimensions in Foundation Axis L, m	18,4
Tower Height H, m	32,2
Height up to Lower Crossarm h, m	27,2
Weight of Tower with Zinc Coating, kg	8637
Part Number of Installation Diagram	25427

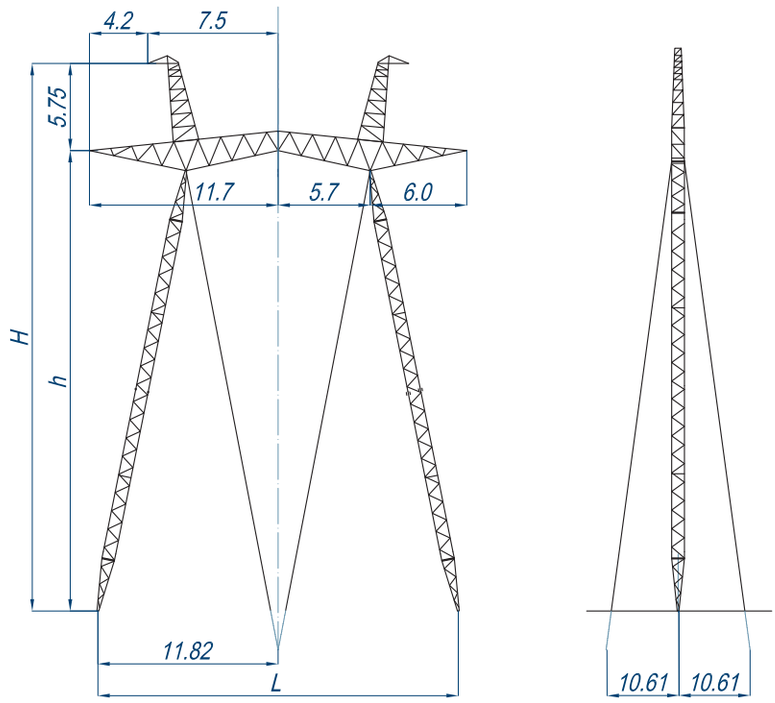

Product Name	ПП500–3
Glaze Ice Region	II-IV
Wind Region	VI
Wire Model	3xAC-330 ÷ 3xAC-400
Dimensions in Foundation Axis L, m	23,6
Tower Height H, m	37,8
Height up to Lower Crossarm h, m	32,0
Weight of Tower with Zinc Coating, kg	7586
Part Number of Installation Diagram	3.407.2-155

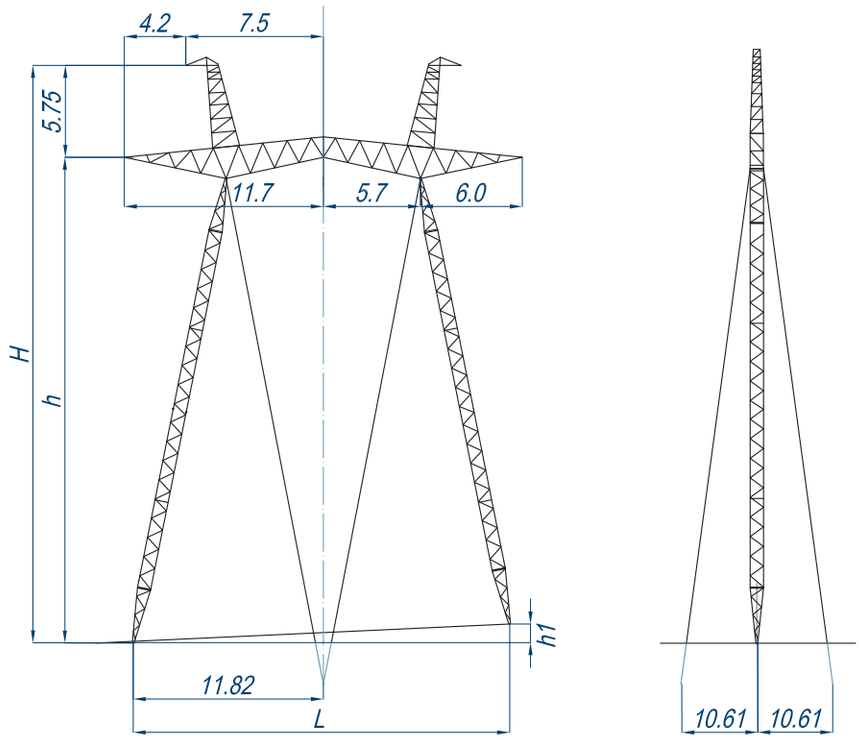

Product Name	ПП500-3-I	ПП500-3-II	ПП500-3-III	ПП500-3-IV
Glaze Ice Region	II-IV	II-IV	II-IV	II-IV
Wind Region	VI	VI	VI	VI
Wire Model	3xAC-330 ÷ 3xAC-400	3xAC-330 ÷ 3xAC-400	3xAC-330 ÷ 3xAC-400	3xAC-330 ÷ 3xAC-400
Dimensions in Foundation Axis L, m	23,387	23,134	22,881	22,628
Tower Height H, m	37,8	37,8	37,8	37,8
Height up to Lower Crossarm h, m	32,0	32,0	32,0	32,0
Косогорность h1, м	1.27	2.53	3.8	5.06
Weight of Tower with Zinc Coating, kg	7519	7452	7386	7320
Part Number of Installation Diagram	3.407.2-155			

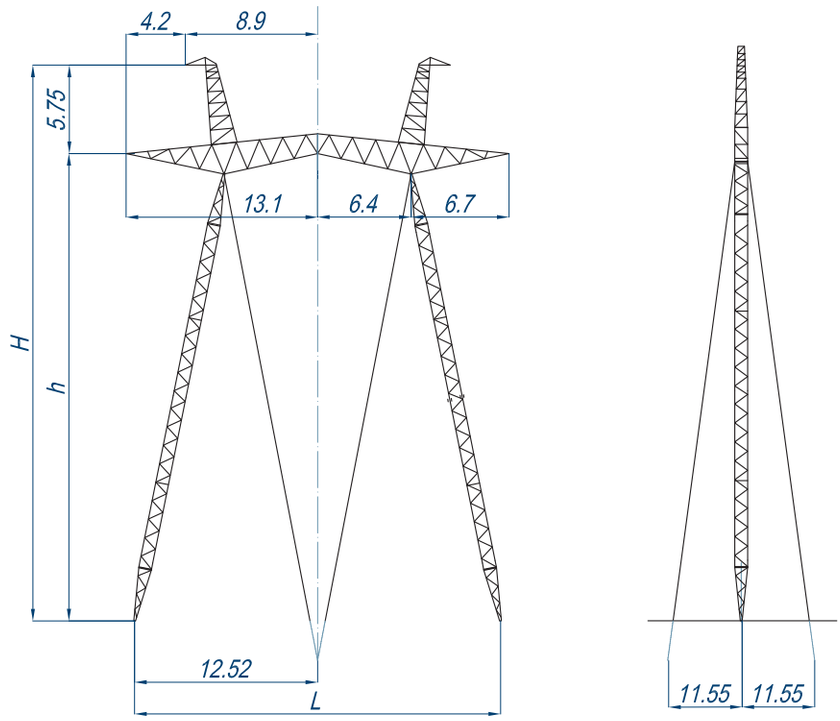

Product Name	ПП500–7
Glaze Ice Region	II-IV, special
Wind Region	VII
Wire Model	3xAC 400
Dimensions in Foundation Axis L, m	25,04
Tower Height H, m	37,75
Height up to Lower Crossarm h, m	32,0
Weight of Tower with Zinc Coating, kg	12277
Part Number of Installation Diagram	3.407.2-160
Note	Tower designed for areas with polluted air and for mountainous regions.

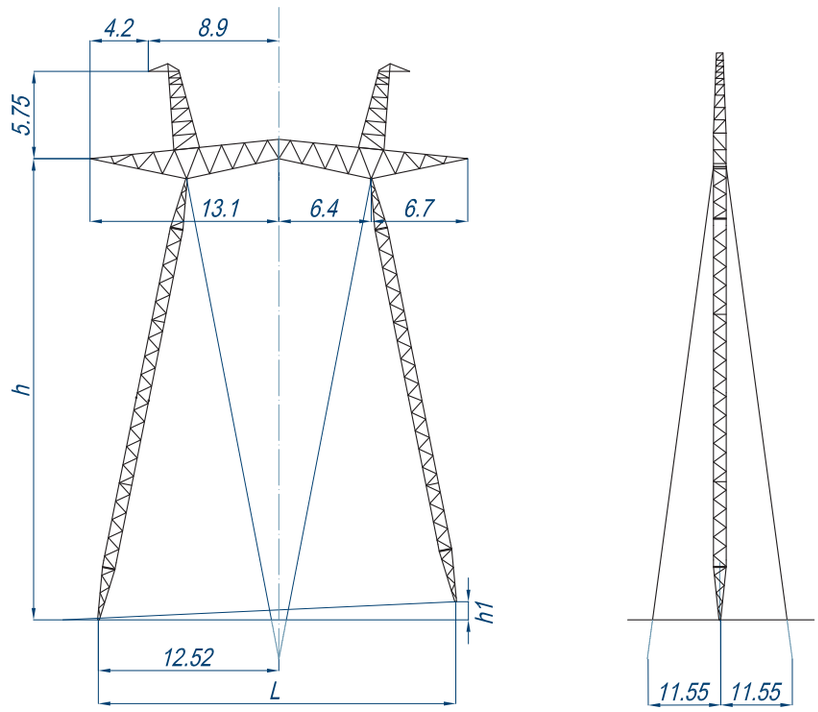

Product Name	ПП500-7-I	ПП500-7-II	ПП500-7-III	ПП500-7-IV
Glaze Ice Region	II-IV, special	II-IV, special	II-IV, special	II-IV, special
Wind Region	VII	VII	VII	VII
Wire Model	3xAC-400	3xAC-400	3xAC-400	3xAC-400
Dimensions in Foundation Axis L, m	24,78	24,53	24,3	24,03
Tower Height H, m	37,8	37,8	37,8	37,8
Height up to Lower Crossarm h, m	32,0	32,0	32,0	32,0
Косогорность h1, м	1.27	2.53	3.8	5.06
Weight of Tower with Zinc Coating, kg	12179	12074	11970	11866
Part Number of Installation Diagram	3.407.2-160			
Note	Tower designed for areas with polluted air and for mountainous regions.			

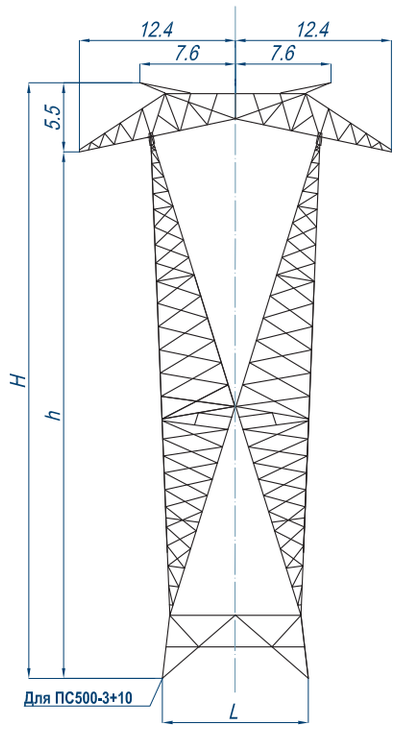

Product Name	ПС500–3	ПС500–3+10
Glaze Ice Region	II-IV, special	II-IV, special
Wind Region	VII	VII
Wire Model	3xAnC-400	3xAnC-400
Dimensions in Foundation Axis L, m	10,8x5,71	11,6x7,2
Tower Height H, m	37,5	47,5
Height up to Lower Crossarm h, m	32,0	42,0
Weight of Tower with Zinc Coating, kg	17379	24963
Part Number of Installation Diagram	3.407.2-160	

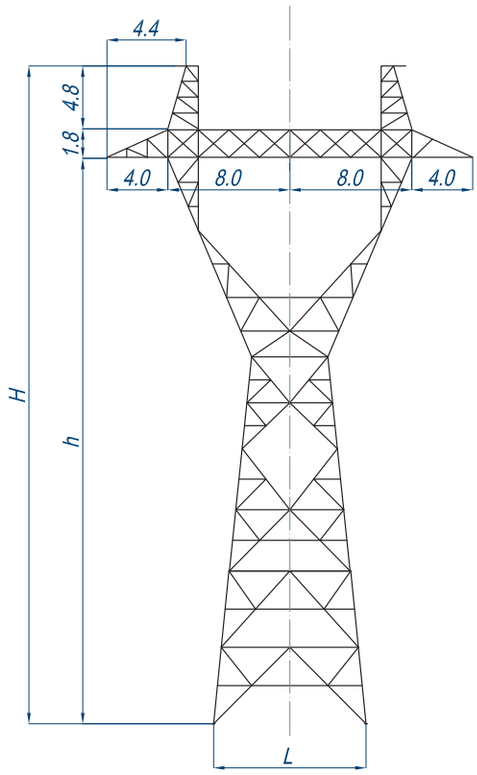

Product Name	P2	P2+5	P2+10
Glaze Ice Region	II-IV	II-IV	II-IV
Wind Region	VII	VII	VII
Wire Model	3xAC-400 ÷ 3xAC-500	3xAC-400 ÷ 3xAC-500	3xAC-400 ÷ 3xAC-500
Dimensions in Foundation Axis L, m	8,01x5,49	9,05x6,27	10,09x7,06
Tower Height H, m	33,1	38,1	43,1
Height up to Lower Crossarm h, m	27	32	37
Weight of Tower with Zinc Coating, kg	12036	14578	17136
Part Number of Installation Diagram		3539тм	

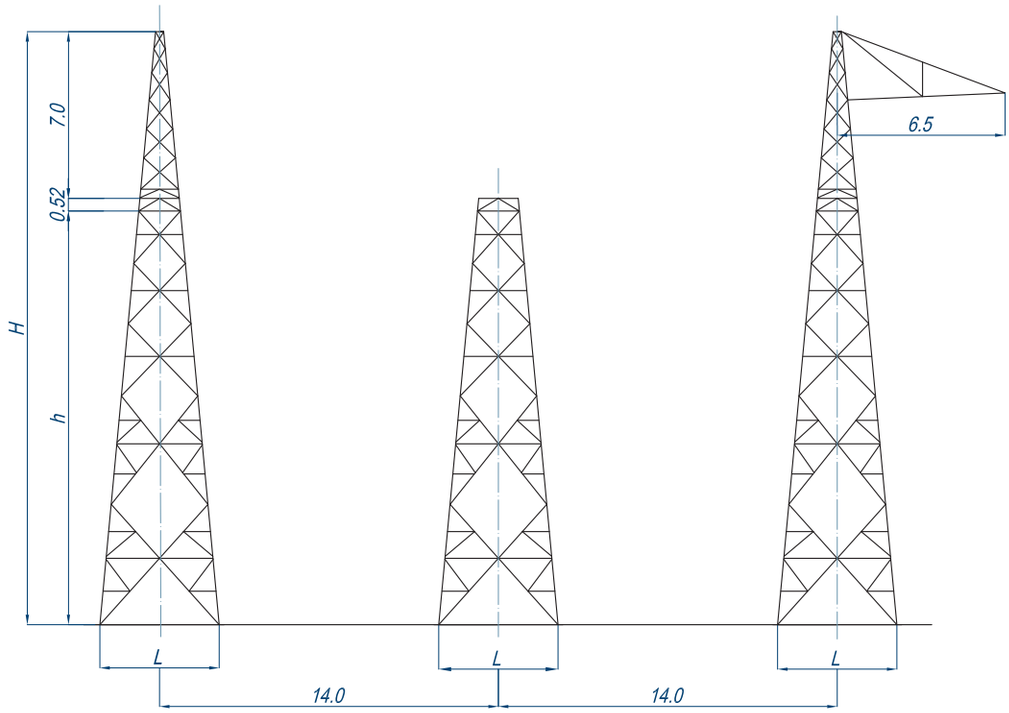

Product Name	У2	У2+5	У2+12
Glaze Ice Region	II-IV	II-IV	II-IV
Wind Region	VI	VI	VI
Wire Model	3xAC-400 ÷ 3xAC-500	3xAC-400 ÷ 3xAC-500	3xAC-400 ÷ 3xAC-500
Dimensions in Foundation Axis L, m	5,0	6,03	7,48
Tower Height H, m	24,52	29,52	36,52
Height up to Mounting Point of Insulators String. h, m	17,0	22.0	29.0
Weight of Tower with Zinc Coating, kg	16156	21681	29523
Part Number of Installation Diagram		3539тм	

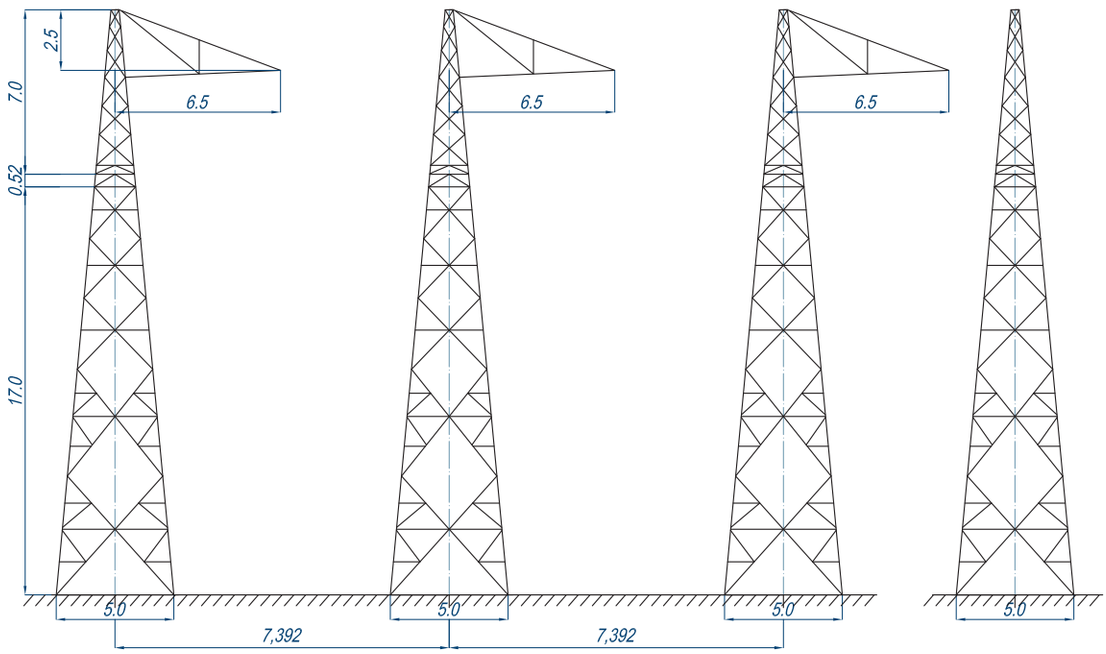

Product Name	У2к	У2к+5	У2к+12
Glaze Ice Region	II-IV	II-IV	II-IV
Wind Region	VI	VI	VI
Wire Model	3xAC-400 ÷ 3xAC-500	3xAC-400 ÷ 3xAC-500	3xAC-400 ÷ 3xAC-500
Dimensions in Foundation Axis L, m	5,0	6,032	7,478
Tower Height H, m	24,52	29,52	36,52
Height up to Mounting Point of Insulators String. h, m	17.0	22.0	29.0
Weight of Tower with Zinc Coating, kg	17402	22926	30769
Part Number of Installation Diagram		3539тм	

500 KV POWER TRANSMISSION TOWERS

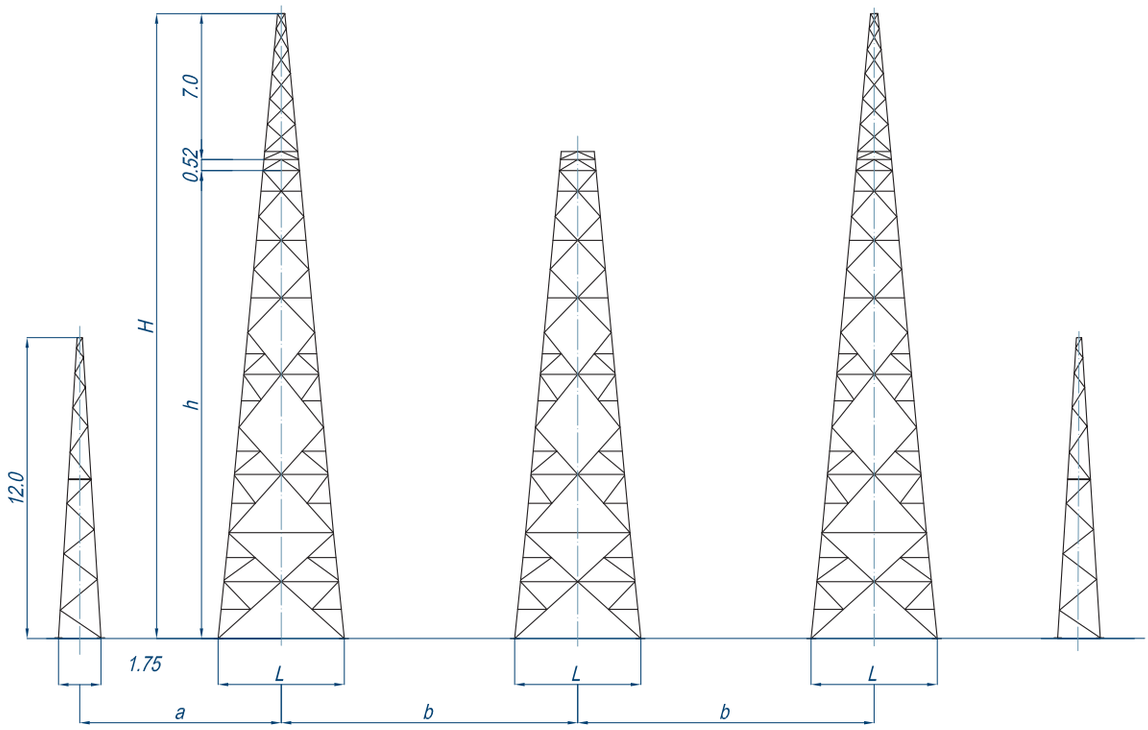

Product Name	У2т	У2+5т	У2+12т
Glaze Ice Region	II-IV	II-IV	II-IV
Wind Region	VI	VI	VI
Wire Model	3xAC-400 ÷ 3xAC-500	3xAC-400 ÷ 3xAC-500	3xAC-400 ÷ 3xAC-500
Dimensions in Foundation Axis L, m	5,0	6,032	7,478
Tower Height H, m	24,52	29,52	36,52
Height up to Mounting Point of Insulators String. h, m	17,0	22,0	29,0
Weight of Tower with Zinc Coating, kg	17803	23325	31168
Номер монтажной схемы		3539тм	

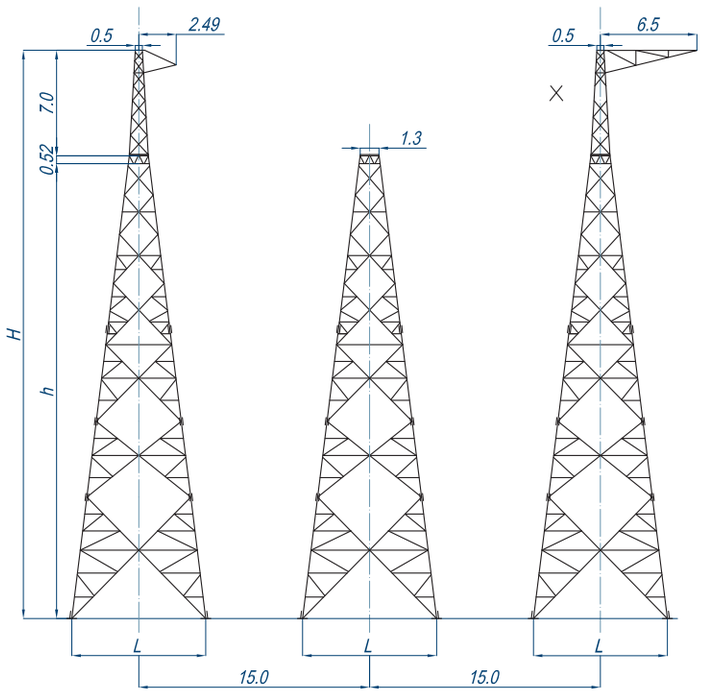

Product Name	УС500-3	УС500-3+5	УС500-3+13
Glaze Ice Region	II-IV, special	II-IV, special	II-IV, special
Wind Region	VII	VII	VII
Wire Model	3xAC-400	3xAC-400	3xAC-400
Dimensions in Foundation Axis L, m	5,72	6,97	8,97
Tower Height H, m	24,52	29,52	37,52
Height up to Mounting Point of Insulators String. h, m	17,0	22,0	30,0
Weight of Tower with Zinc Coating, kg	19236	25771	37002
Номер монтажной схемы		3.407.2-160	
Note	Tower designed for areas with polluted air and for mountainous regions.		

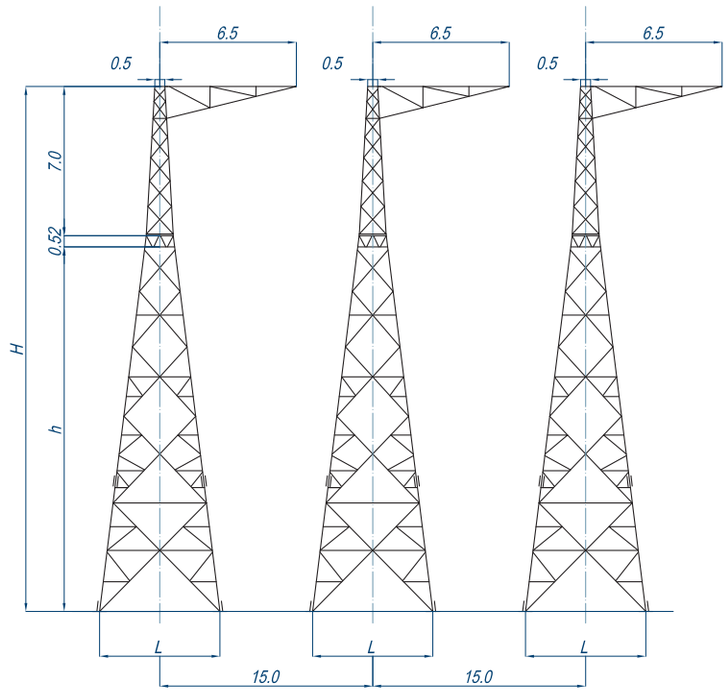

Product Name	УСК500–3	УСК500–3+5	УСК500–3+13
Glaze Ice Region	II-IV, special	II-IV, special	II-IV, special
Wind Region	VII	VII	VII
Wire Model	3xAnC-400	3xAnC-400	3xAnC-400
Dimensions in Foundation Axis L, m	5,72	6,97	8,97
Tower Height H, m	24,52	29,52	37,52
Height up to Mounting Point of Insulators String. h, m	17,0	22,0	30,0
Weight of Tower with Zinc Coating, kg	20685	27220	38451
Part Number of Installation Diagram		3.407.2-160	
Note	Tower designed for areas with polluted air and for mountainous regions.		

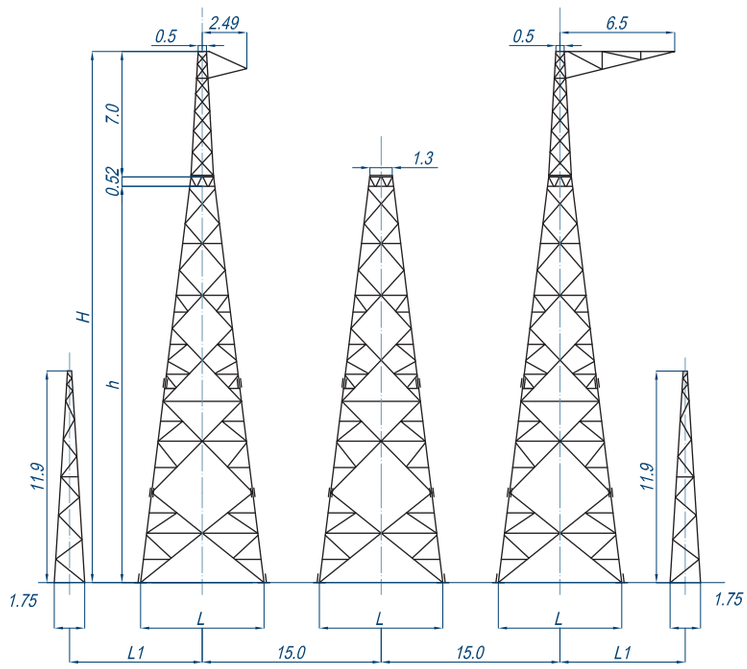

Расстояние L1 определяется при привязке типового проекта.

Product Name	УСКТ500–3+5
Glaze Ice Region	II-IV, special
Wind Region	VII
Wire Model	3xAnC400
Dimensions in Foundation Axis L, m	6,97
Tower Height H, m	29,52
Height up to Mounting Point of Insulators String. h, m	22,0
Weight of Tower with Zinc Coating, kg	28029
Part Number of Installation Diagram	3.407.2-160
Note	Distance L1 is determined during adaptation of a standard design. Tower designed for areas with polluted air and for mountainous regions.

040008, Kazakhstan,
Taldykorgan, Abylaikhan street, 266.
Tel.: +7 (7282) 23 53 00, Fax: +7 (7282) 23 53 30
E-mail:sale1@aspmk.kz
Site: www.aspmk519.kz